ZC520KL
MB Service Manual
V1.0

Content

1. MB illustration 3
2. Power on failure....4
3. Blank screen....5
4. Screen display abnormality 5
5. Touch screen failure 6
6. Optical/distance sensor error 7
7. G-sensor failure 8
8. Geomagnetic sensor failure 9
9. Key failure....10
10. Charging failure, USB identification failure 11
11. Main camera function failure 12
12. Auxiliary camera function failure 13
13. Flashlight failure 14
14. Motor error....15
15. GSM network failure....15
16. WCDMA & LTE network failure 16
17. WIFI/Bluetooth/FM....19
18. GPS failure 20
19. Headset identification failure/headset MIC errors....21
20. MIC silent/low volume 22
21. Earpiece silent....23
22. Speaker silent....23
23. SIM card or SD card identification failure....24

1. MB illustration

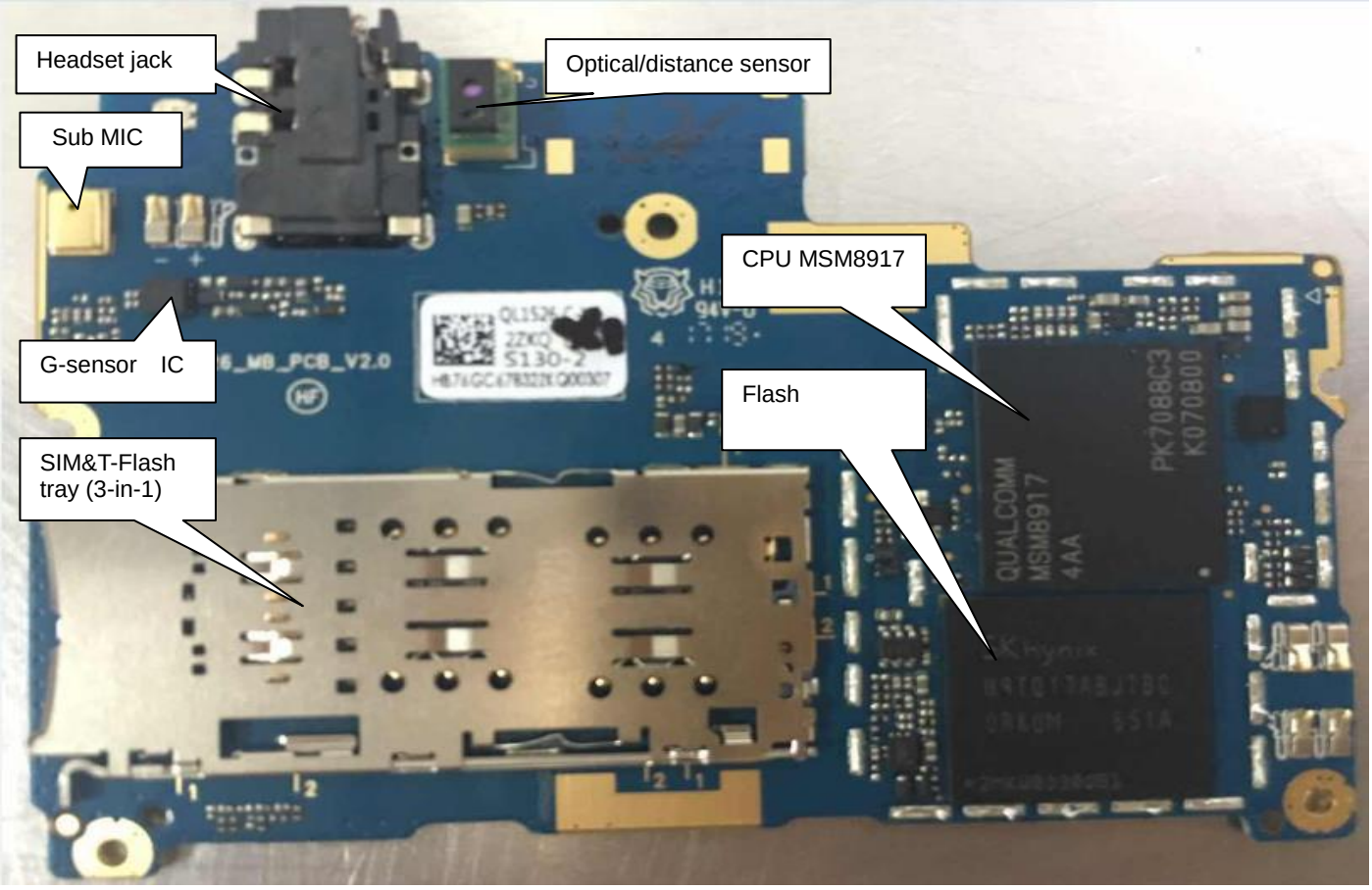

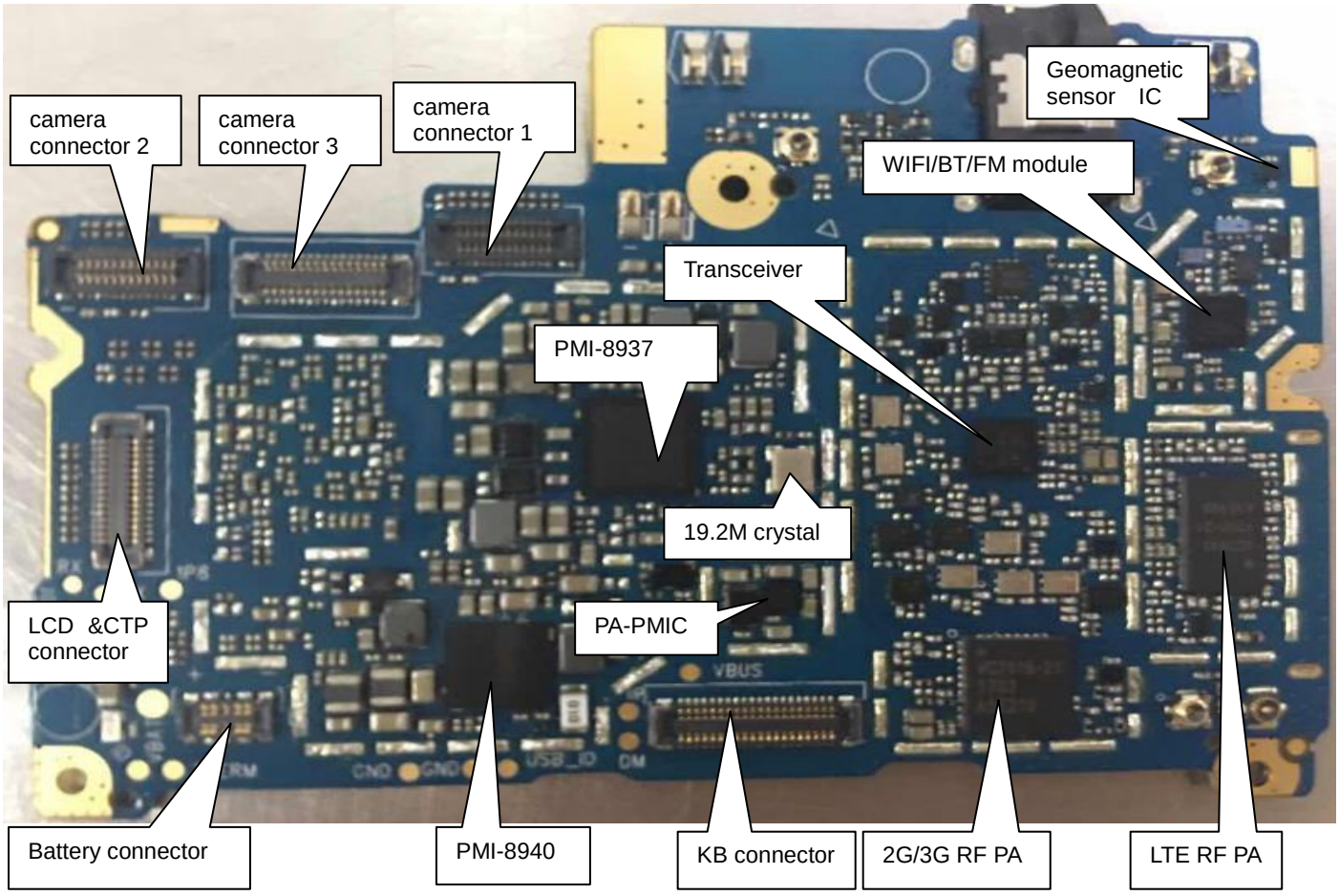

2. Power on failure

Solution:

1 Check battery connector soldering and its body for oxidation or damage;

2 Check the following voltage for short circuits with GND or for any errors;

VBAT	3.8--4.2V
VCORE	0.7--1.4V
VSYS	1.825/2.2V
VPA	0.5-3.4V
VTXCO	2.8V
VA	2.8V
VCAMA	2.8V
VCN28	2.8V
VCAMA	2.8V
VUSB	3.3V
VEMC_3V3	3.3V

3 Check power on circuit for any errors;

4 For power on current around 20MA, check crystal for soldering errors;

5 For power on current errors above 1A, check VBAT circuit for short circuits to ground, troubleshoot ground diode at individual locations;

6 For power on current error around 100MA, check for hot point on MB and troubleshoot;

7 Check soldering of each main chip with X-ray, including CPU/Flash/PMIC/TR IC;

8 Add-solder or re-solder main chip, validate soldering conditions;

9 Replace the power supply module of CPU/Flash/PMIC (PM8937/PM8940) ;

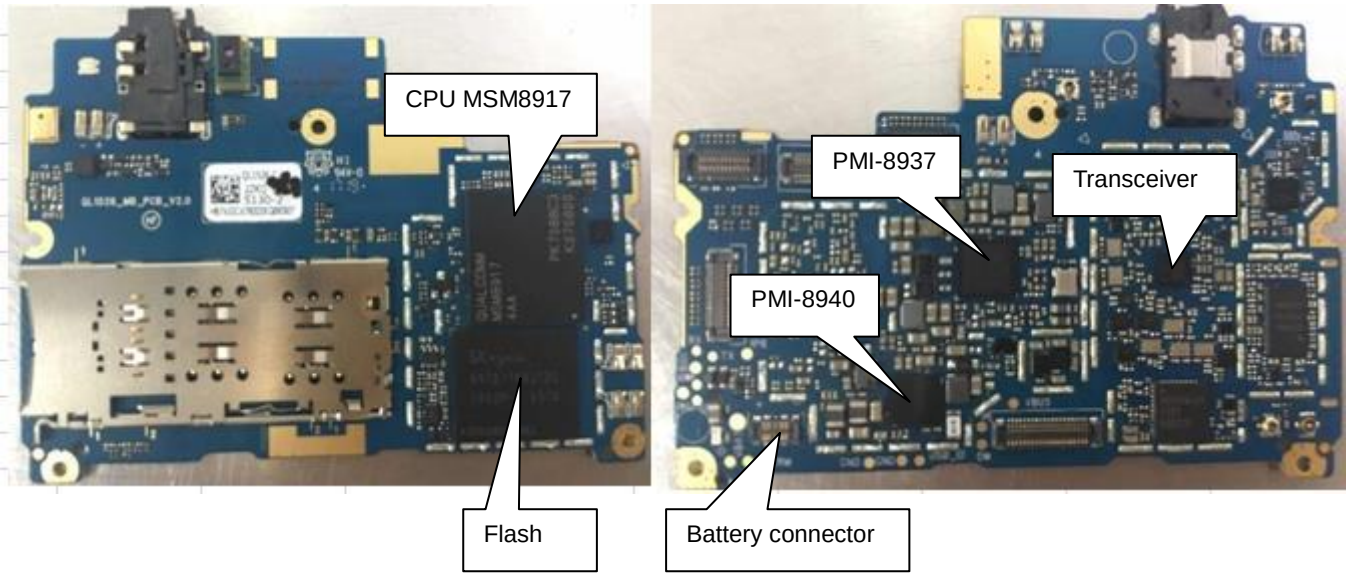

3. Blank screen

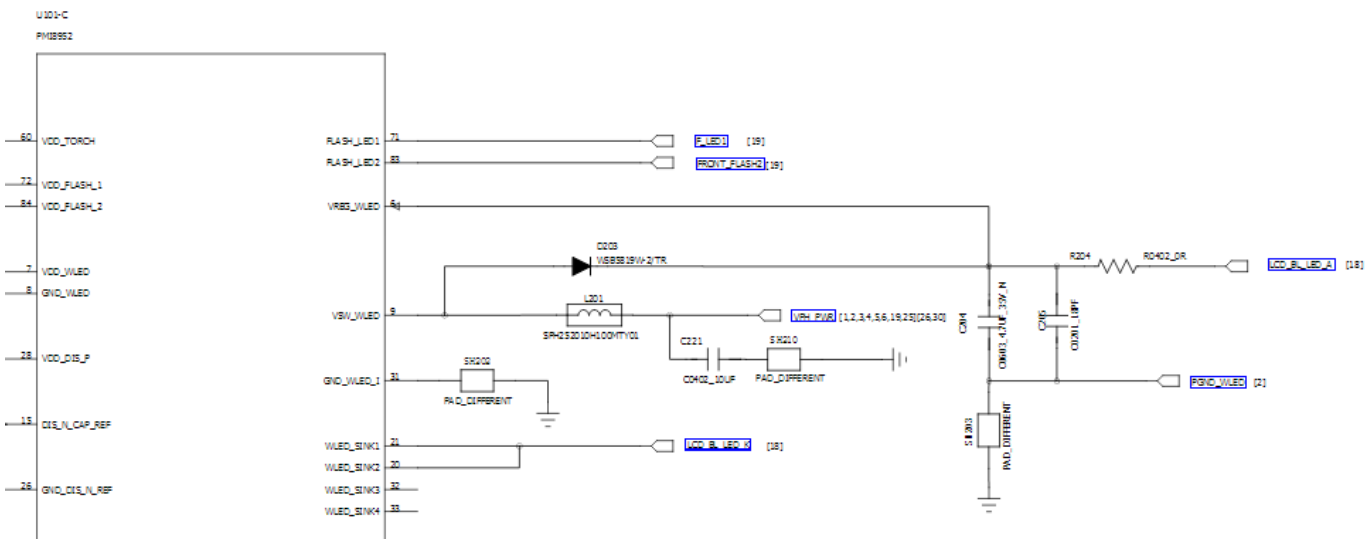

Solution:

1 LCD power supply module is provided by PM8940, check whether the PM8940 output voltage is normal by comparing the LCD_VSP with the voltage on the normal board;

2 Check LCD connector for installation, re-install;

3 Check LCD connector for soldering errors and observe the connector pin by using a magnifying glass or microscope;

4 Check R204 and L201 for normal conduction or soldering in the opposite direction;

5 Measure whether the LCD_BL_LED_A and LCD_BL_LED_B voltage signal are normal;

6 Check VPH_PWR for normal power supply;

4. Screen display abnormality

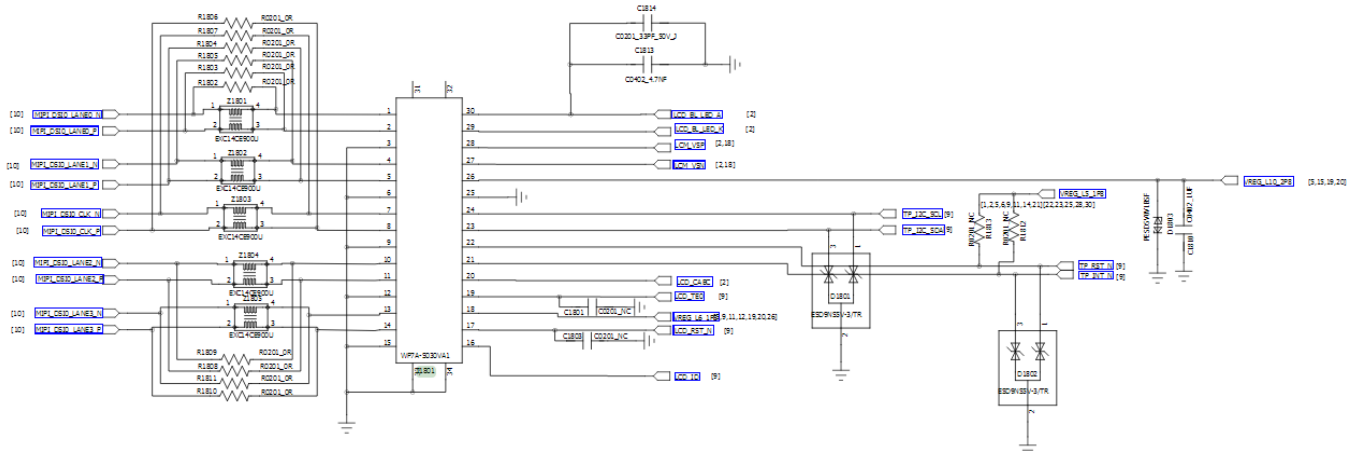

Solution:

1 Re-install LCD display screen or replace it before powering on the phone and check again;

2 Check the J1801 PIN of LCD connector for soldering errors and whether the metal dome inside the connector is deformed or stained with foreign objects;

3 Check LCD filter (Z1801, Z1802, Z1803, Z1804, Z1805) for soldering errors or damage;

4 Check CPU for over-gluing, in case an X-ray equipment is available, check the IC solder ball with it;

5 Add-solder or re-solder CPU or replace it;

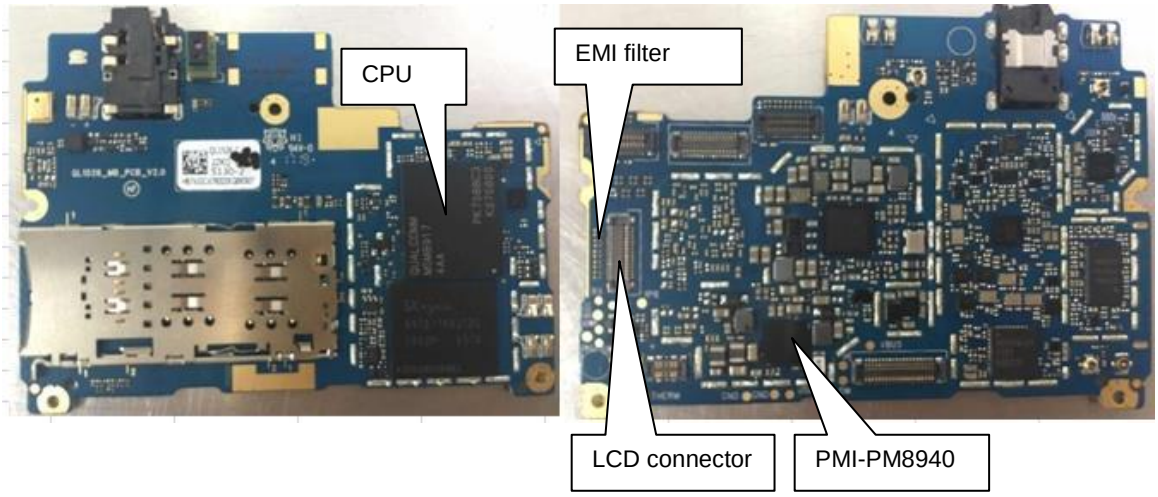

5. Touch screen failure

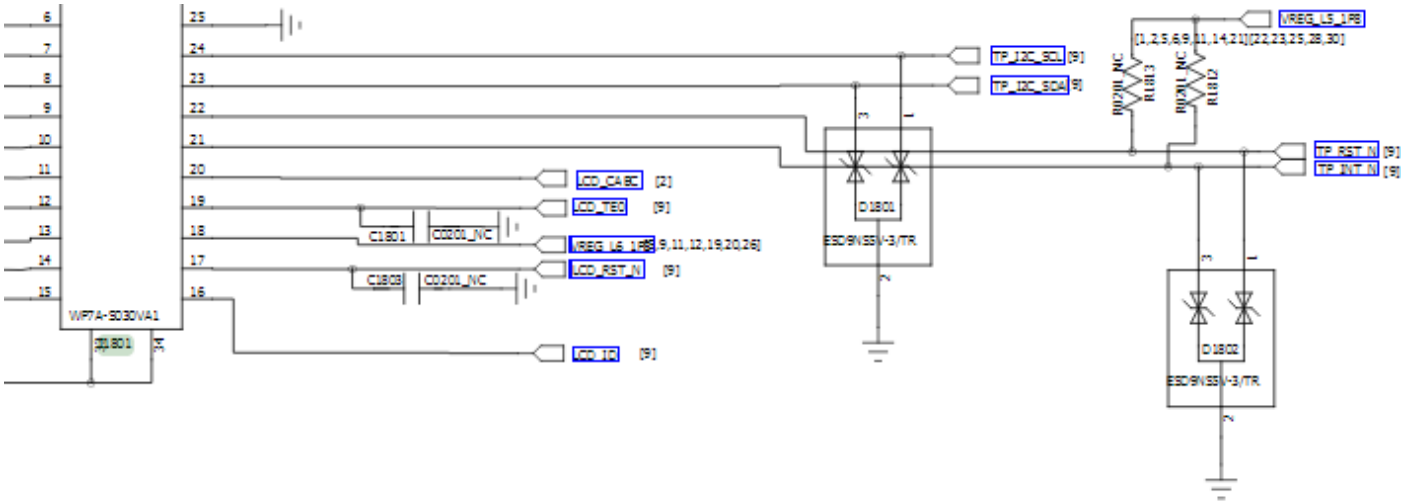

Solution:

1. Re-install CTP or replace it before powering on and testing it again;
2. Check the connector J1801. Check its soldering or body for any errors, re-solder or replace it before testing it again;
3. Check whether the VREG_L5_1P8/VREG_L10_2P8 voltage is normal;
4. Check the CPU soldering status with an X-ray, add-solder or re-solder it before testing it again;
5. Check whether the impedance at each testing point of CTP is normal and compare it with the normal MB;
6. Replace CPU;

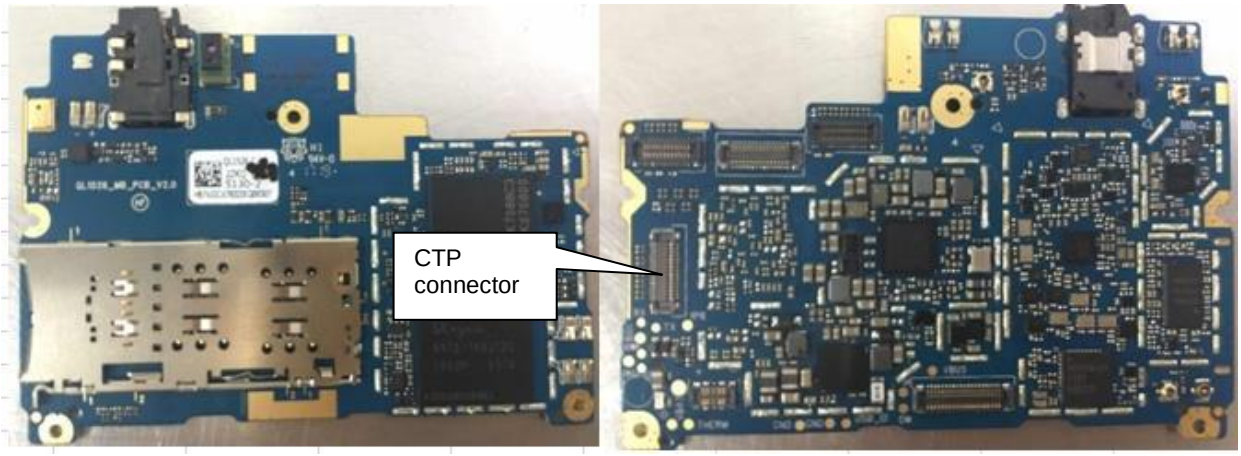

6. Optical/distance sensor error

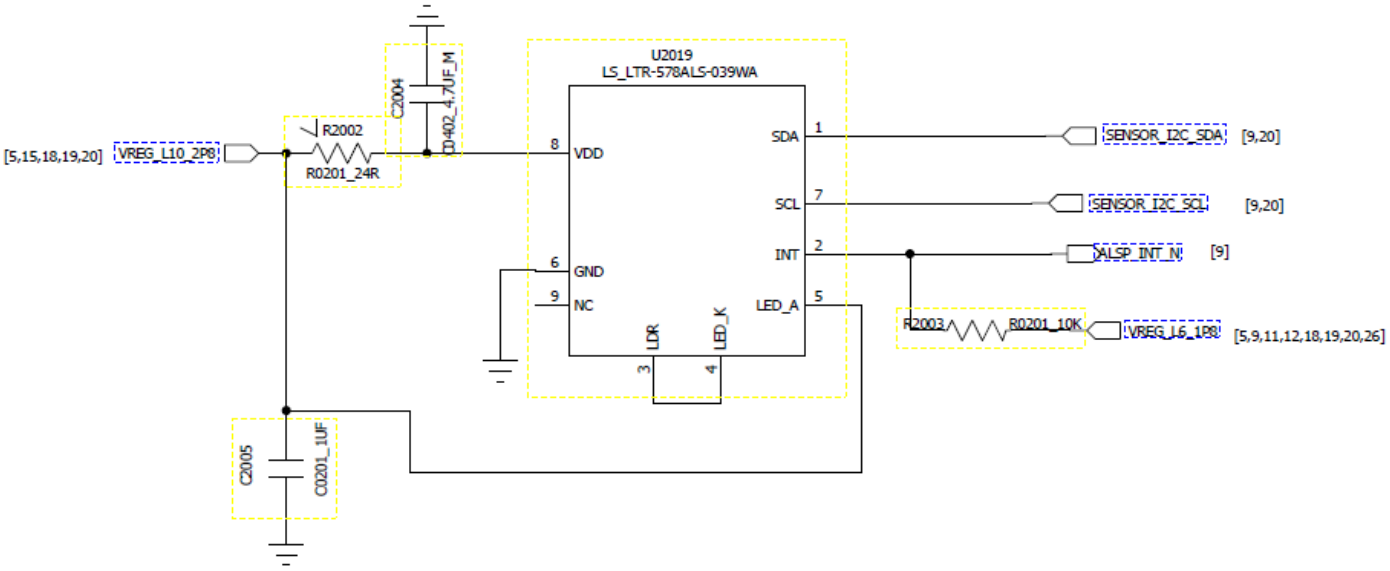

Solution:

1 Check optical chip surface for dirt or blockage;
2 Check optical/distance sensor for damage or soldering error;
3 Measure whether the VREG_L10_2P8 voltage on both ends of R2002 is normal;
4 Measure whether the VREG_L6_1P8 voltage on both ends of R2003 is normal;
5 Replace or re-solder U2019 light sensor/distance sensor chip;
6 Add-solder or re-solder CPU or replace it;

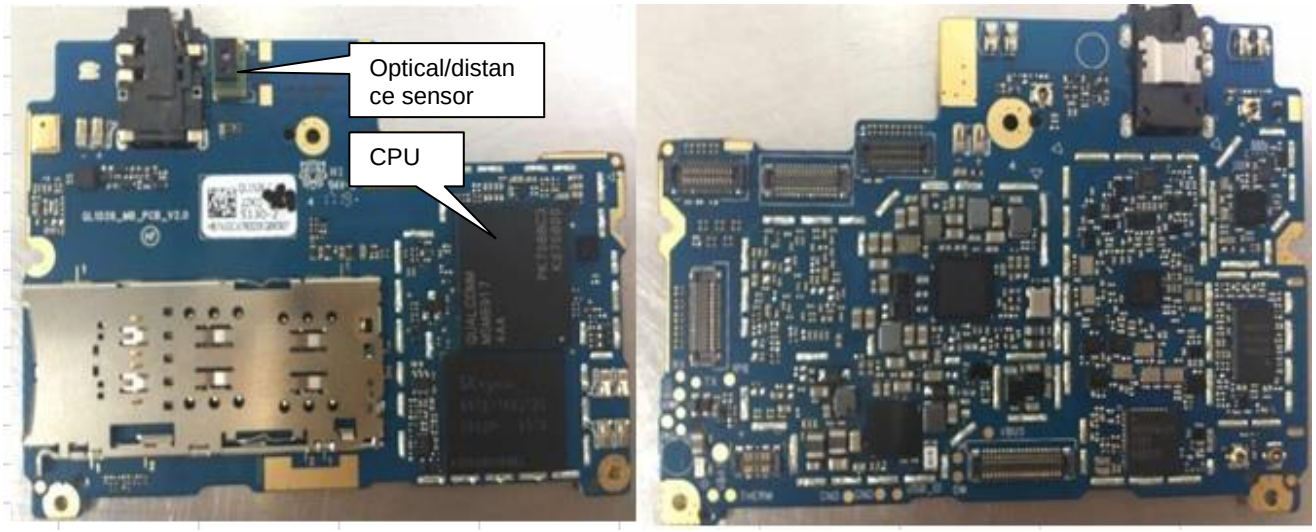

7. G-sensor failure

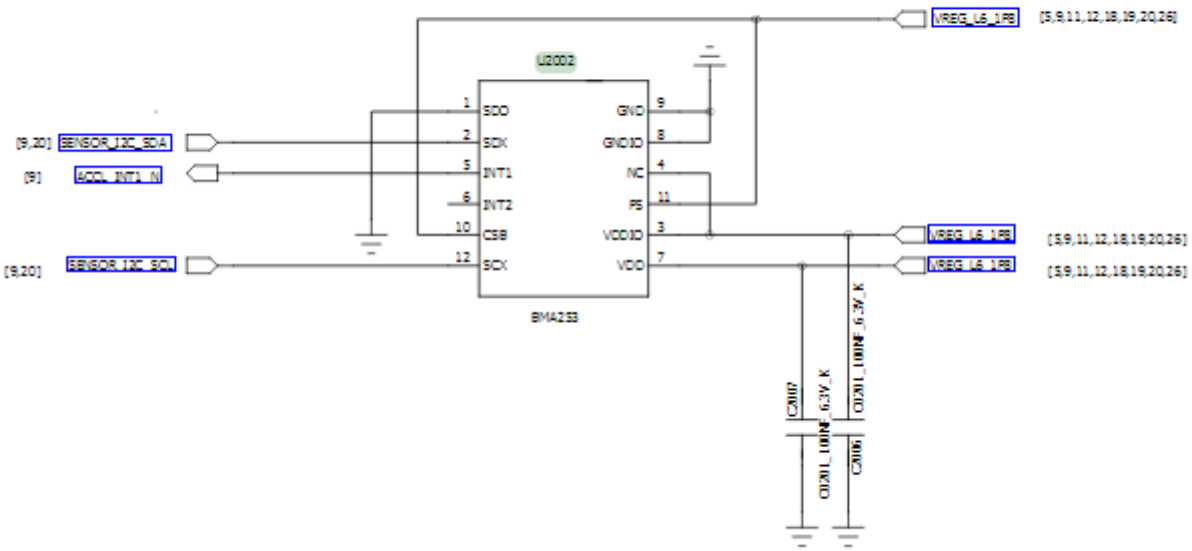

Solution:

1 Measure whether the C2007 voltage VREG_L6_1P8 is normal
2 Re-solder or replace the sensor U2002;
3 Check the sensor module circuit components for soldering errors or damage
4 Re-solder or replace CPU;

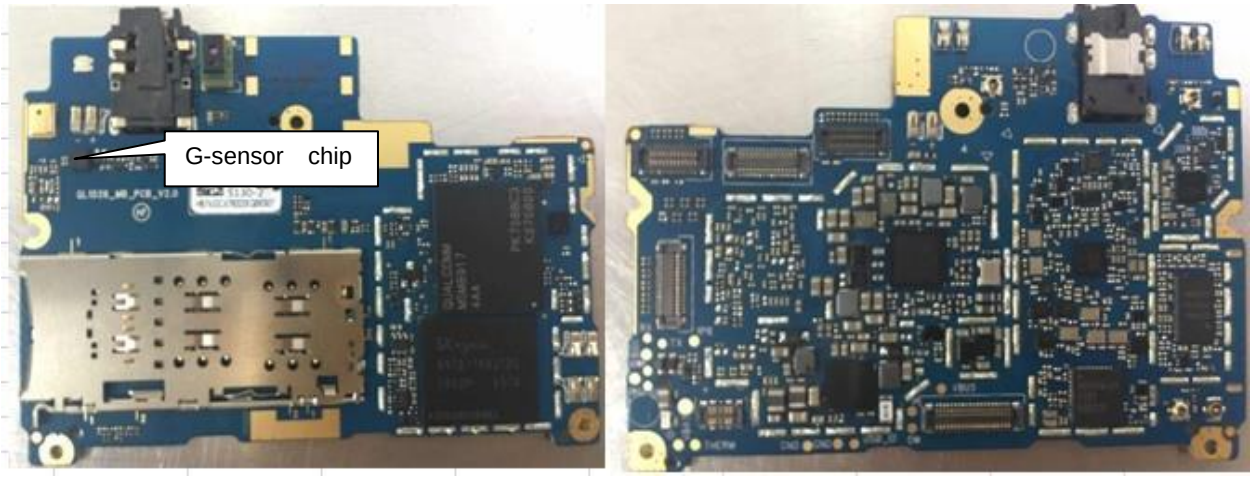

8. Geomagnetic sensor failure

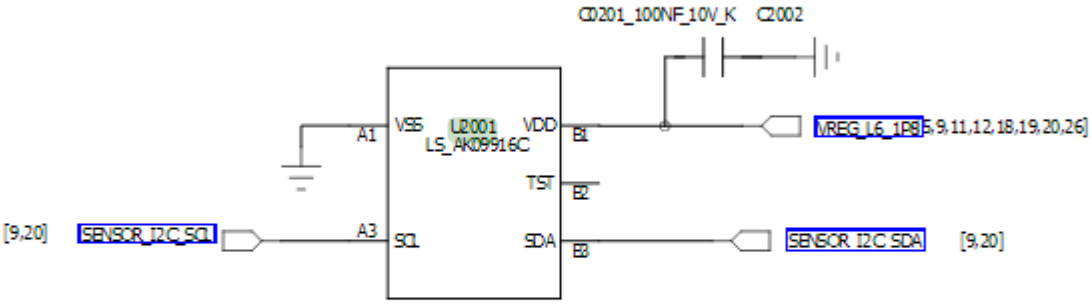

Solution:

1. Measure whether C2002 voltage is normal and compare it with the normal MB;
2. Check U2001 surrounding circuit module components for soldering errors, defects, damage or collision;
3. Measure whether the impedance of the related circuit matching components is normal and compare it with the normal MB;
4. Re-solder or replace CPU;

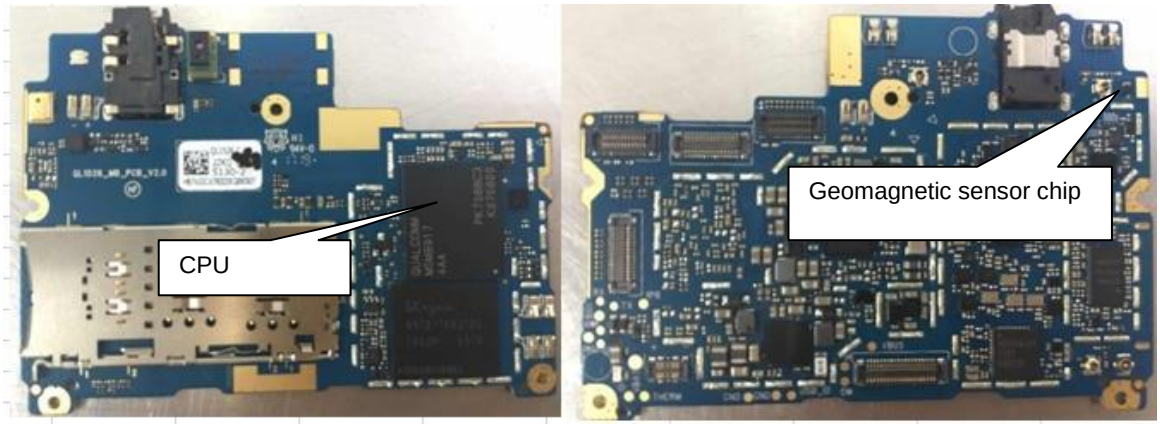

9. Key failure

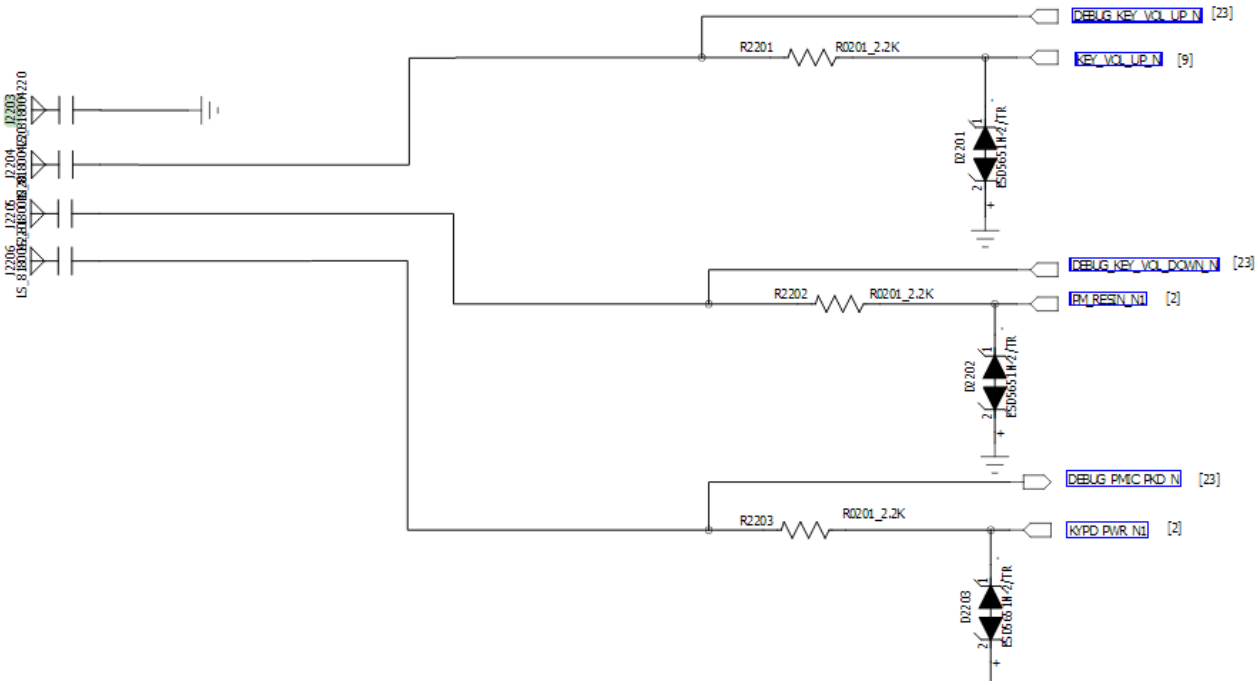

Solution:

1 Re-install connector or replace side key before testing again;
2 Check the key connector PIN for poor soldering or abnormal connector;
3 Check Volume UP/Volume down/Power On voltage signal validity;
4 Check components on key circuit for damage or soldering errors;
5 Measure whether the impedance of each measuring point at the key connector is normal;
6 Re-solder or replace CPU or PMIC;

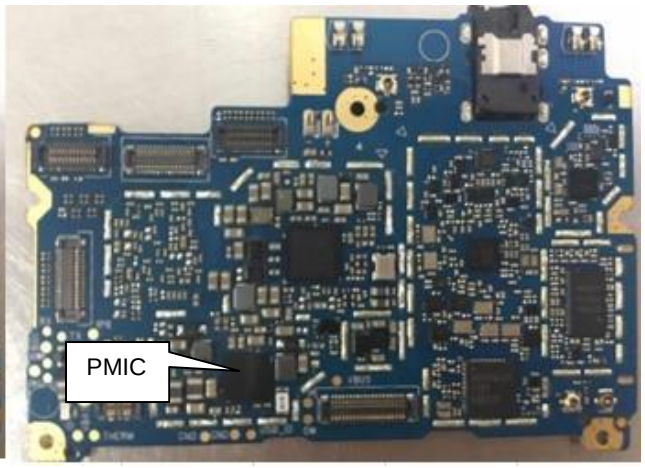

10. Charging failure, USB identification failure

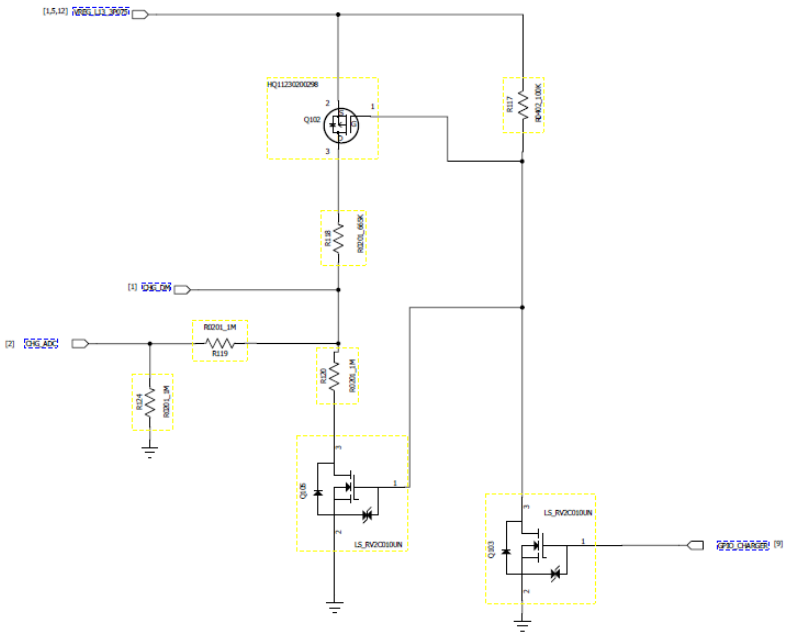

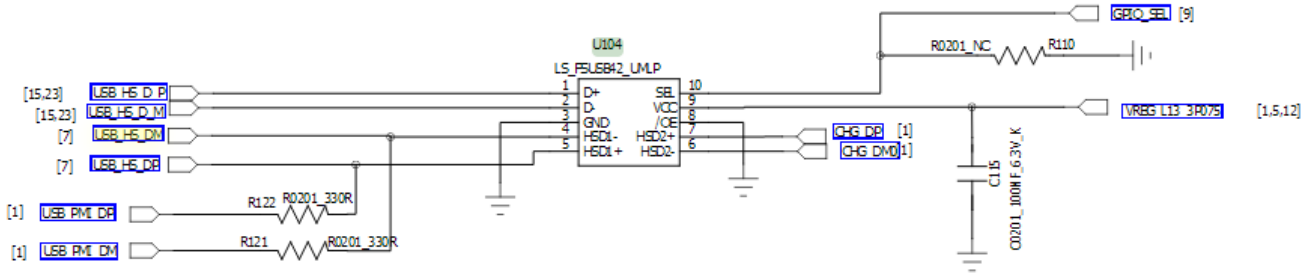

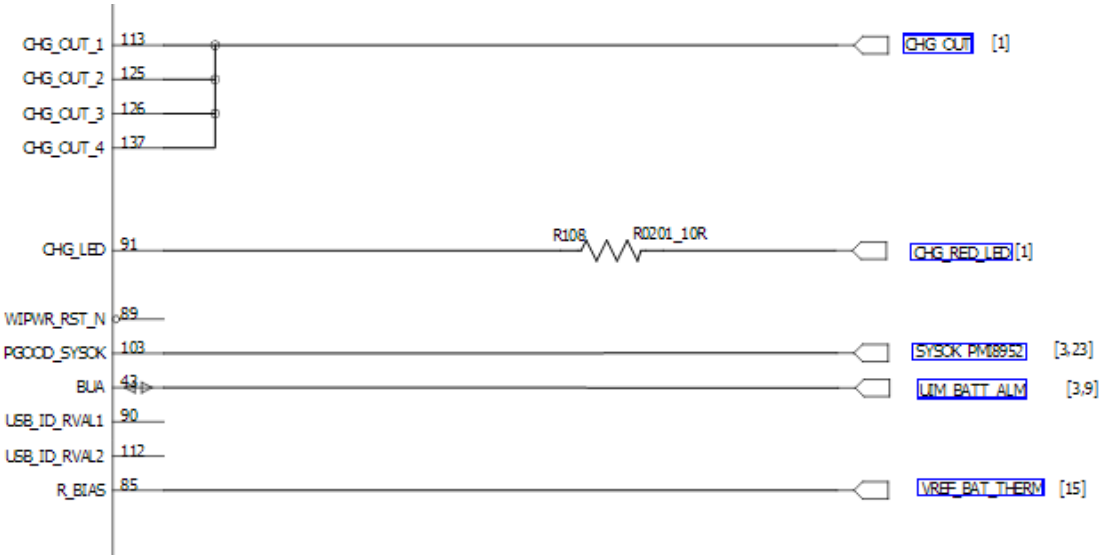

Solution:

1 Re-connect KB board or replace KB board before testing it;

2 Check MB's KB board connector for dirt or damage;

3 Replace battery before testing again;

4 Check battery connector J1502 or dirt, cold solder joints or damage;

5 The charging management module is integrated in PM8940,Check the power management chip U101 for soldering errors;

6 Check the power management chip U301 for soldering errors;

7 Re-solder or replace CPU

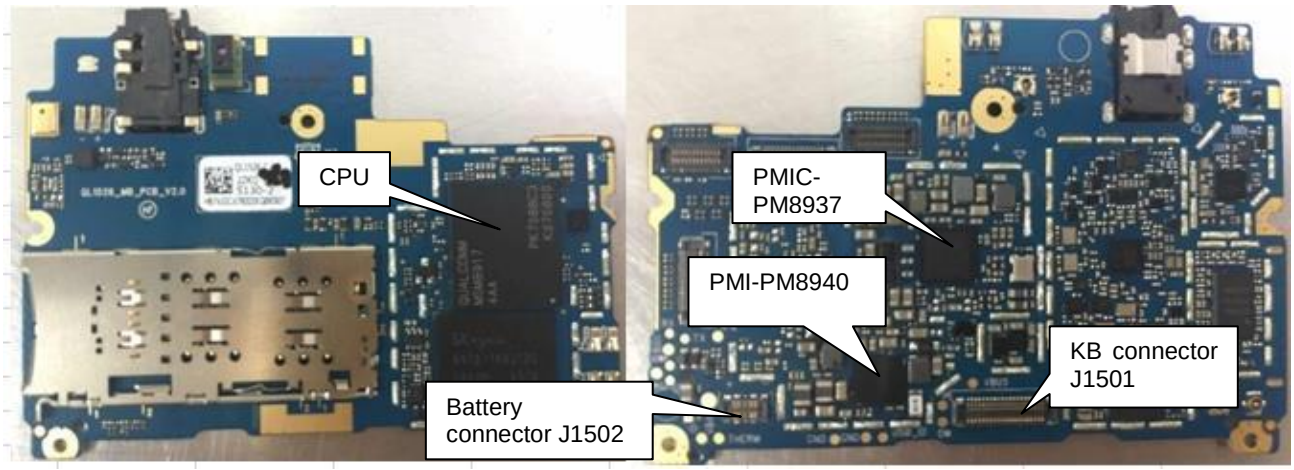

11. Main camera function failure

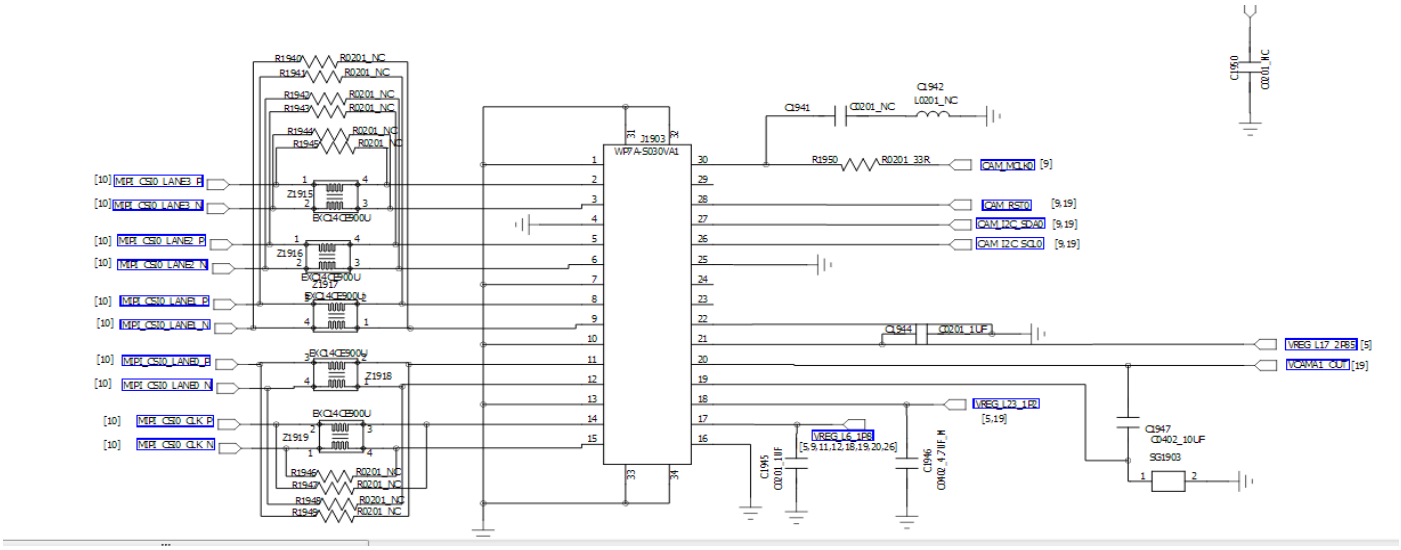

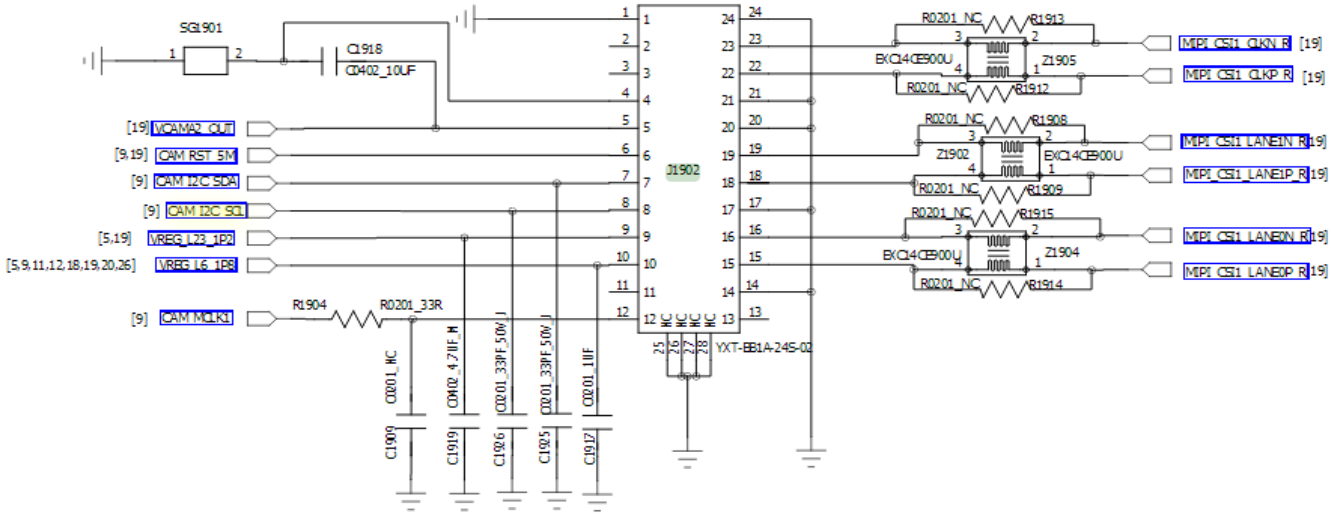

Solution:

1. Double-camera design: check camera installation for any abnormalities, re-install it or replace it before testing again;
2. Check the main camera J1902 and J1903 connector PIN for soldering errors and whether the metal dome inside the connector is collapsed, deformed or dirty;
3. Check VCMA1_OUT, VCAM2_OUT, VREG_L23_1P2 and VREG_L6_1P8 voltage;
4. Check Z1915/ Z1916/ Z1917/ Z1918/ Z1919/Z1902/Z1904/Z1905 EMI filter for damage or soldering error;
5. Measure whether the impedance of each PIN of the connector is normal
6. Check whether the circuit components of the analogue switch chip module is normal;
7. Add-solder or re-solder U1904;
8. Check whether the LDO chip U1902 or its soldering is normal;
9. Add-solder or re-solder PMIC or replace it;
10. Add-solder or re-solder CPU or replace it;

12. Auxiliary camera function failure

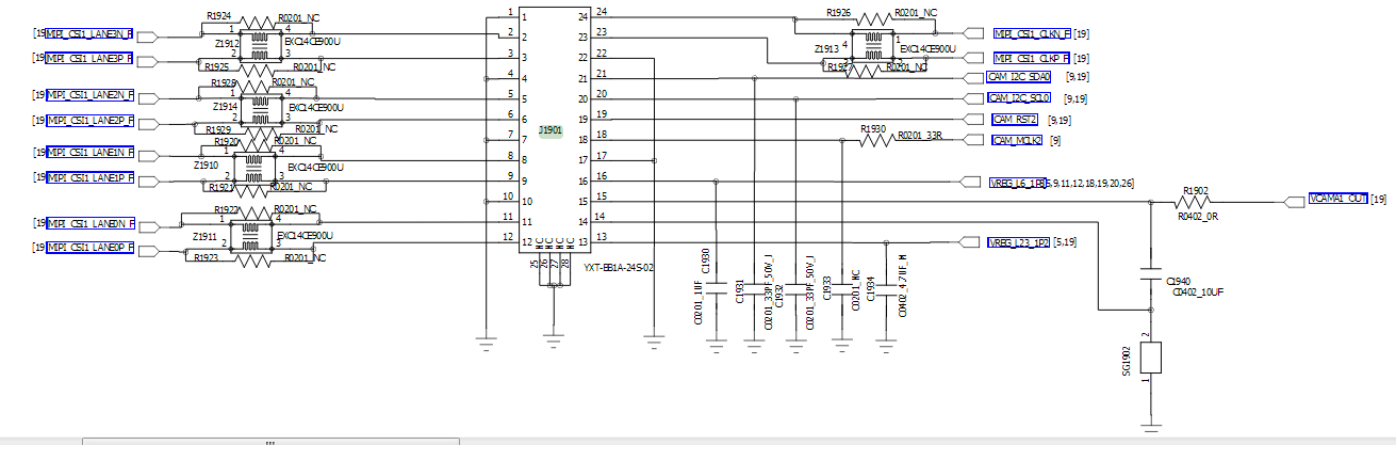

Solution:

1. Check camera installation for any abnormalities, re-install it or replace it before testing again;
2. Check the auxiliary camera J1901 connector PIN for soldering errors and whether the metal dome inside the connector is deformed or dirty;
3. Check CAM2_OUT / VREG _L23_1P2 / VREG_L6_1P8 for voltage errors, if so, check PMIC for output errors or peripheral circuits for short circuits or broken circuits;
4. Check Z1910/Z1912/Z1911/Z1914 EMI filter for damage or soldering error;
5. Check whether the LDO chip U1906 or its soldering is normal;
6. Add-solder or re-solder CPU or replace it;

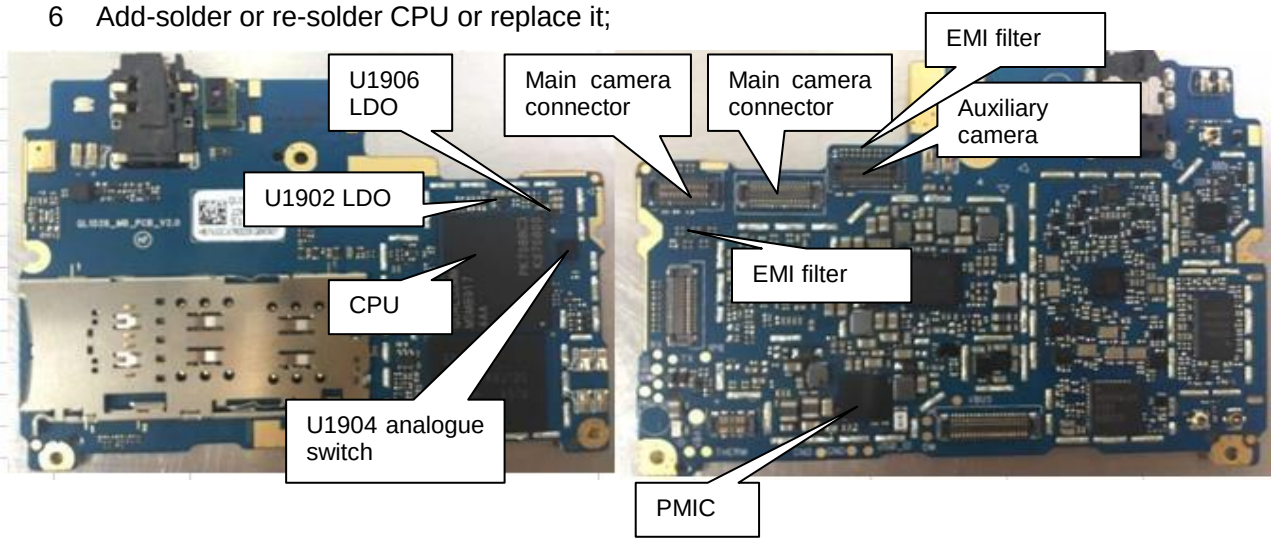

13. Flashlight failure

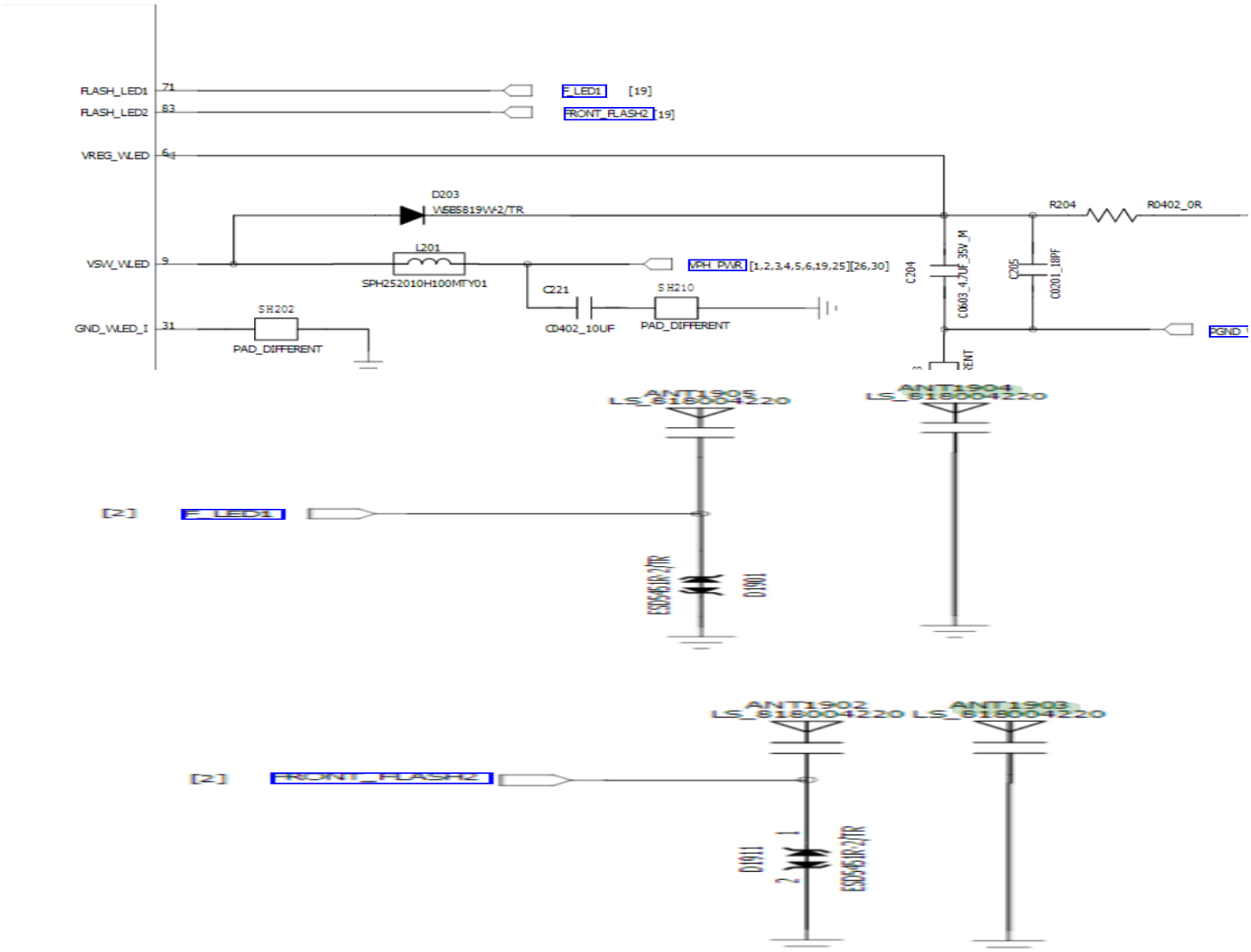

Solution:

1. The camera flashlight module is placed on the shell externally. Re-assemble or replace before testing;
2. Check whether the dome on the MB is collapsed or the surface is dirty, thus resulting in poor contact;
3. Check the matching circuit components on MB for damages or abnormal soldering;
4. Check whether the front flashlight drive chip U1905 or its soldering is normal and whether the matching components are abnormal in terms of soldering or its body;
5. Re-solder or replace PMIC;

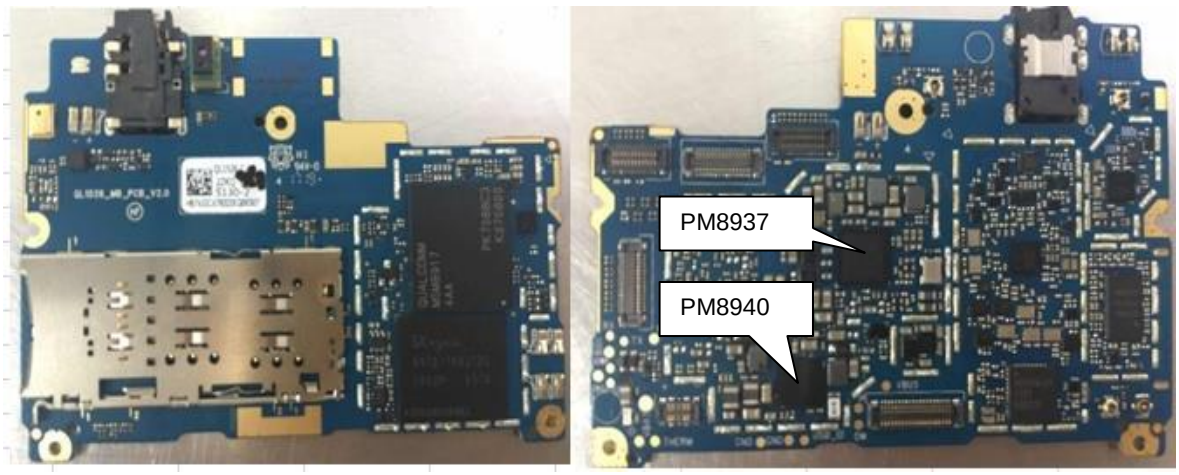

14. Motor error

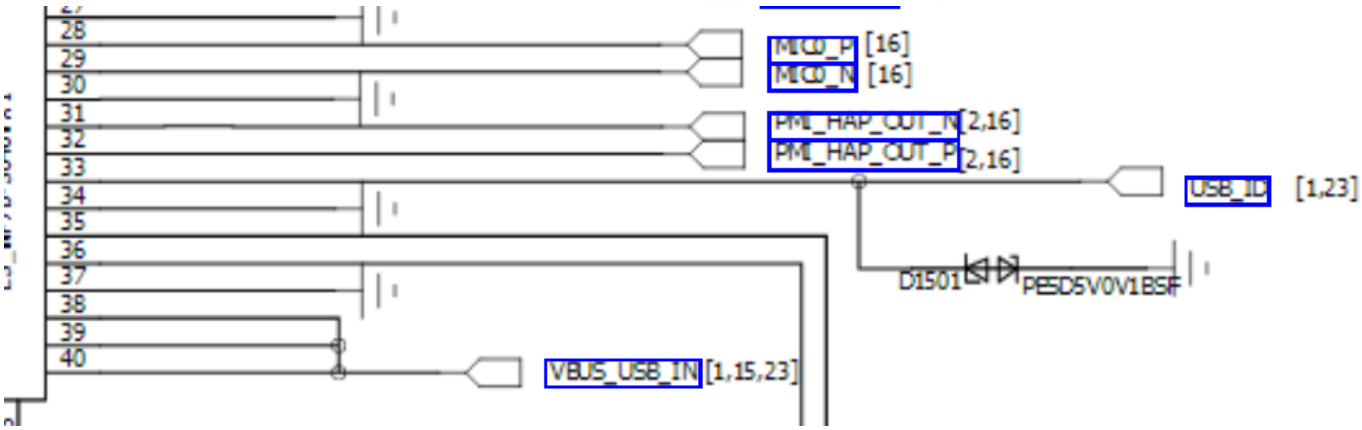

Solution:

1 Check whether KB board connection or assembly is normal and re-assemble or replace KB board and connect FPC before testing;

2 Check the MB KB board connector PIN for soldering errors and whether the metal dome inside the connector is deformed or dirty;

3 Measure whether the impedance of the corresponding PIN of the connector is normal;

4 Re-solder power management chip U301 or replace it;

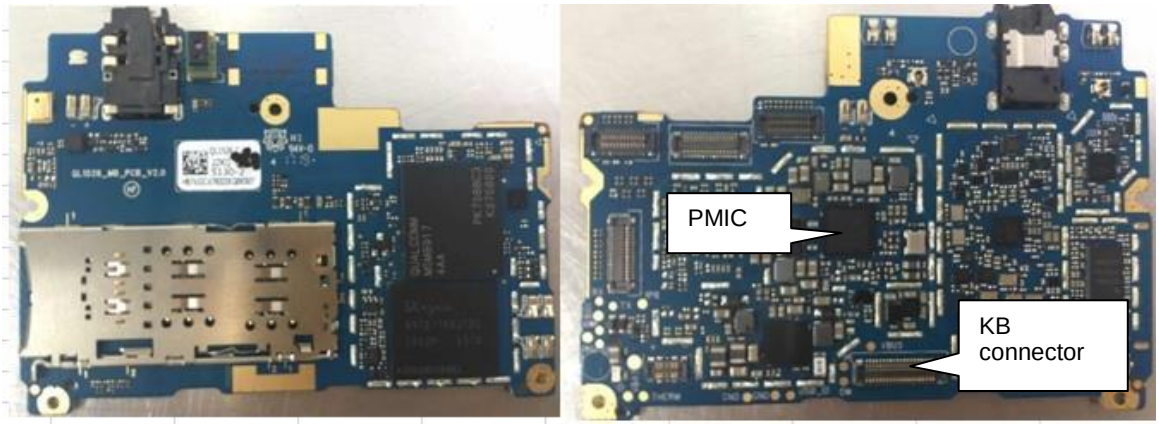

15. GSM network failure

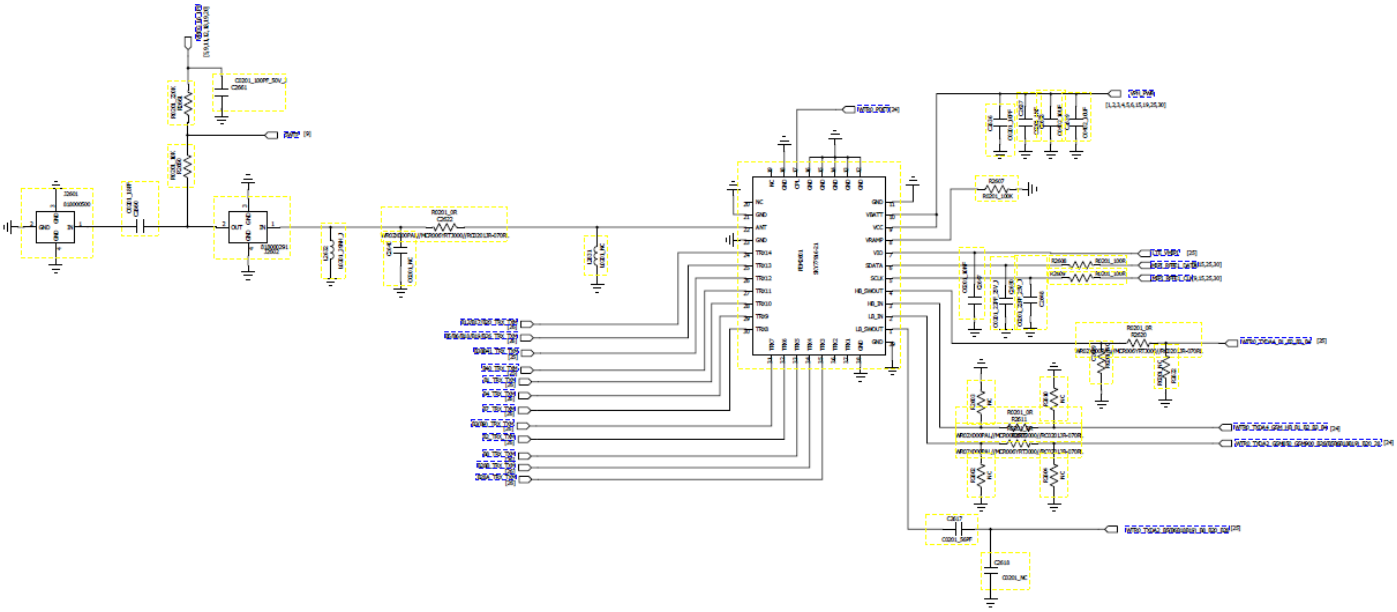

Solution:

1 Check KB board's antenna soldering status, contact with phone casing antenna, or damaged body;
2 Check RF connector connection circuit induction resistance components for error soldering after damaged;
3 Check front radio frequency switch FEM2601 and relevant components and its soldering for damage;
4 Calibrate and overall test MB radio indicator, troubleshoot and repair failed bands, if any;
5 Add-solder or replace U2401 RF transceiver chip;
6 Add-solder or replace U301 power management chip;
7 Add-solder or replace U1101 main chip;

16. WCDMA & LTE network failure

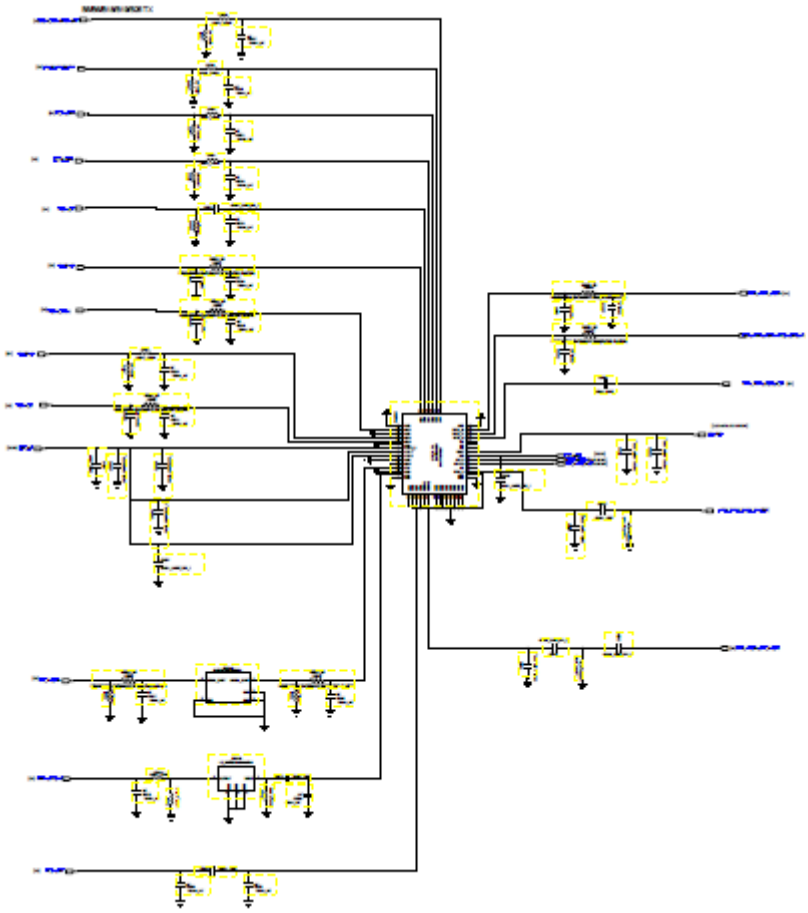

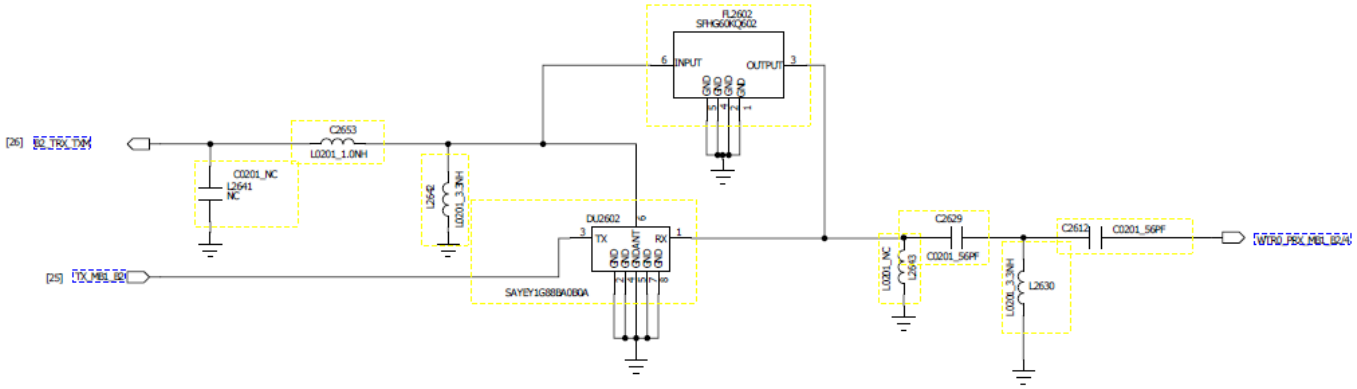

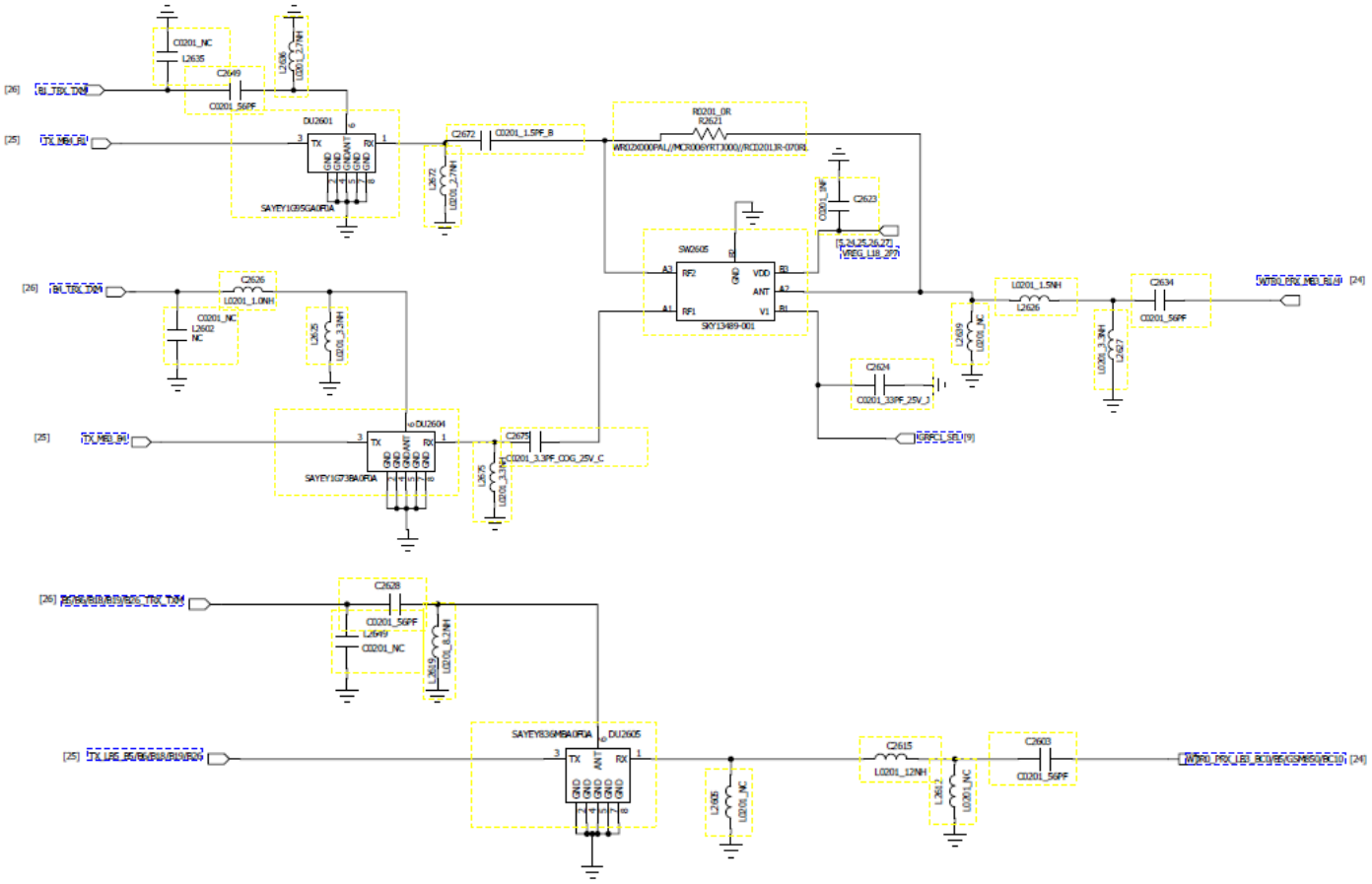

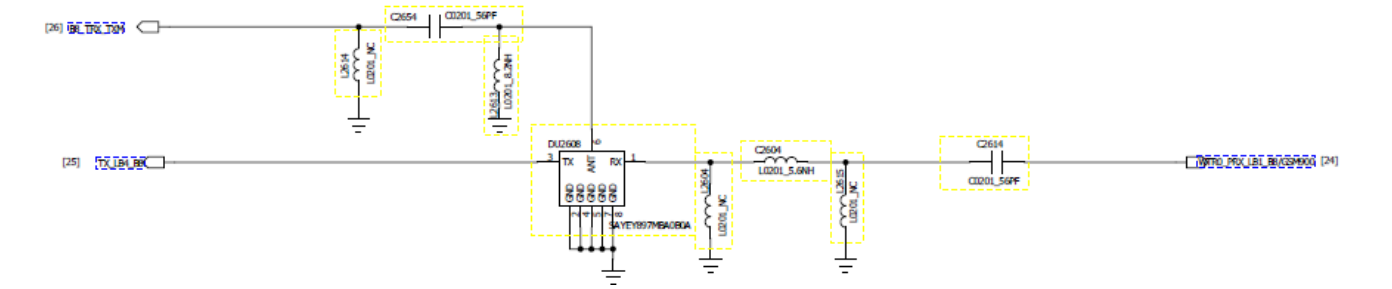

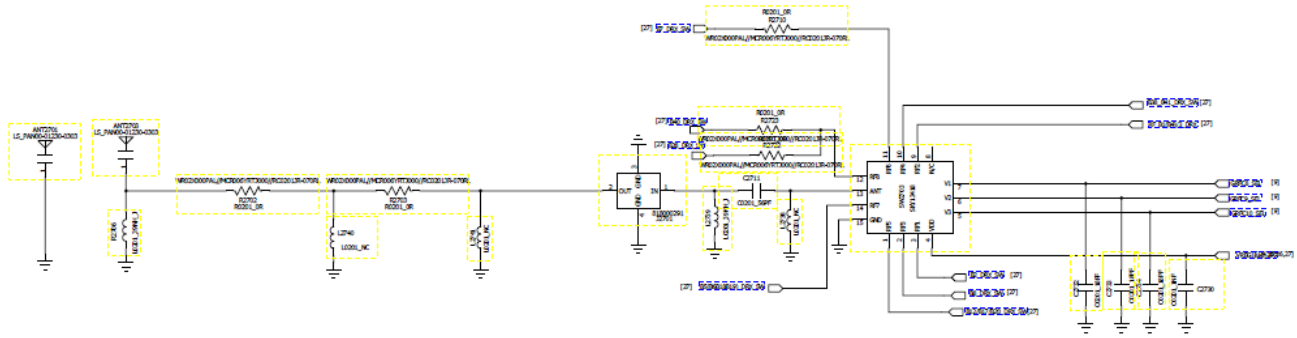

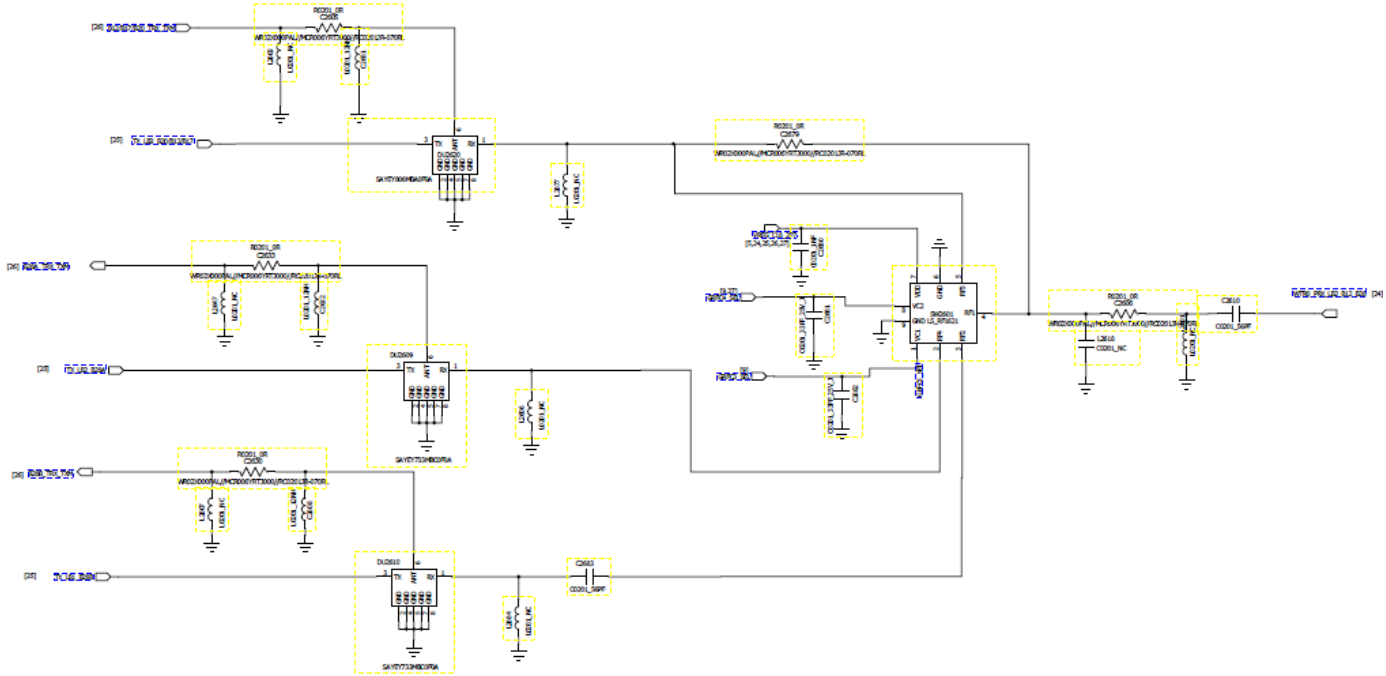

Solution:

1 Test phone message, pinpoint cause of error, determine receiving or transmitting errors according to bands with errors, troubleshoot relevant circuit components;

2 Re-solder PA FEM2601, PA2501 and RF transceiver U2401;

3 According to RF indicator, check relevant band's transceiver channel components and their soldering for damage;

4 Troubleshoot relevant band of diversity filter module according to source drawing;

5 Re-solder or replace U1101 CPU.

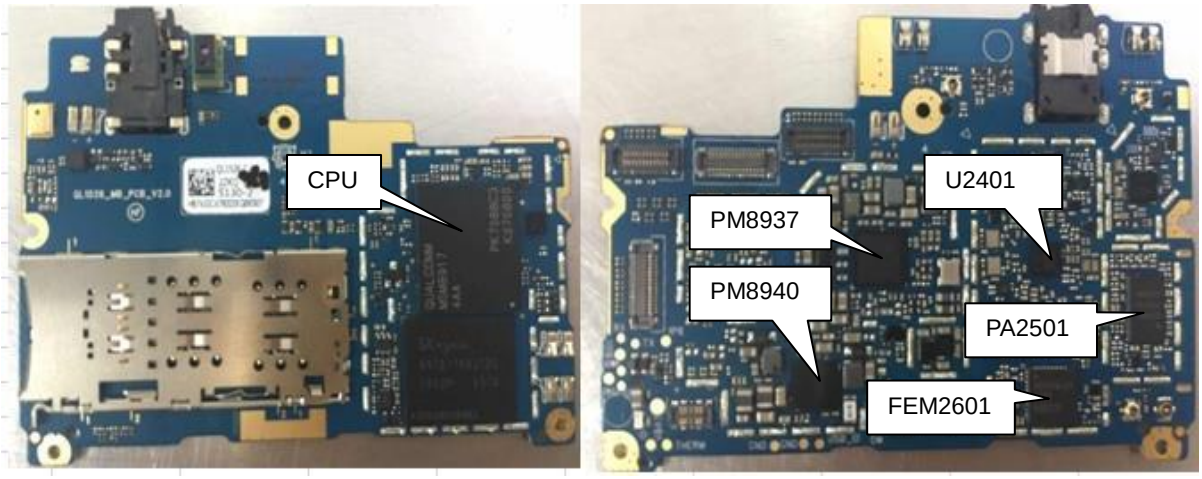

17. WIFI/Bluetooth/FM

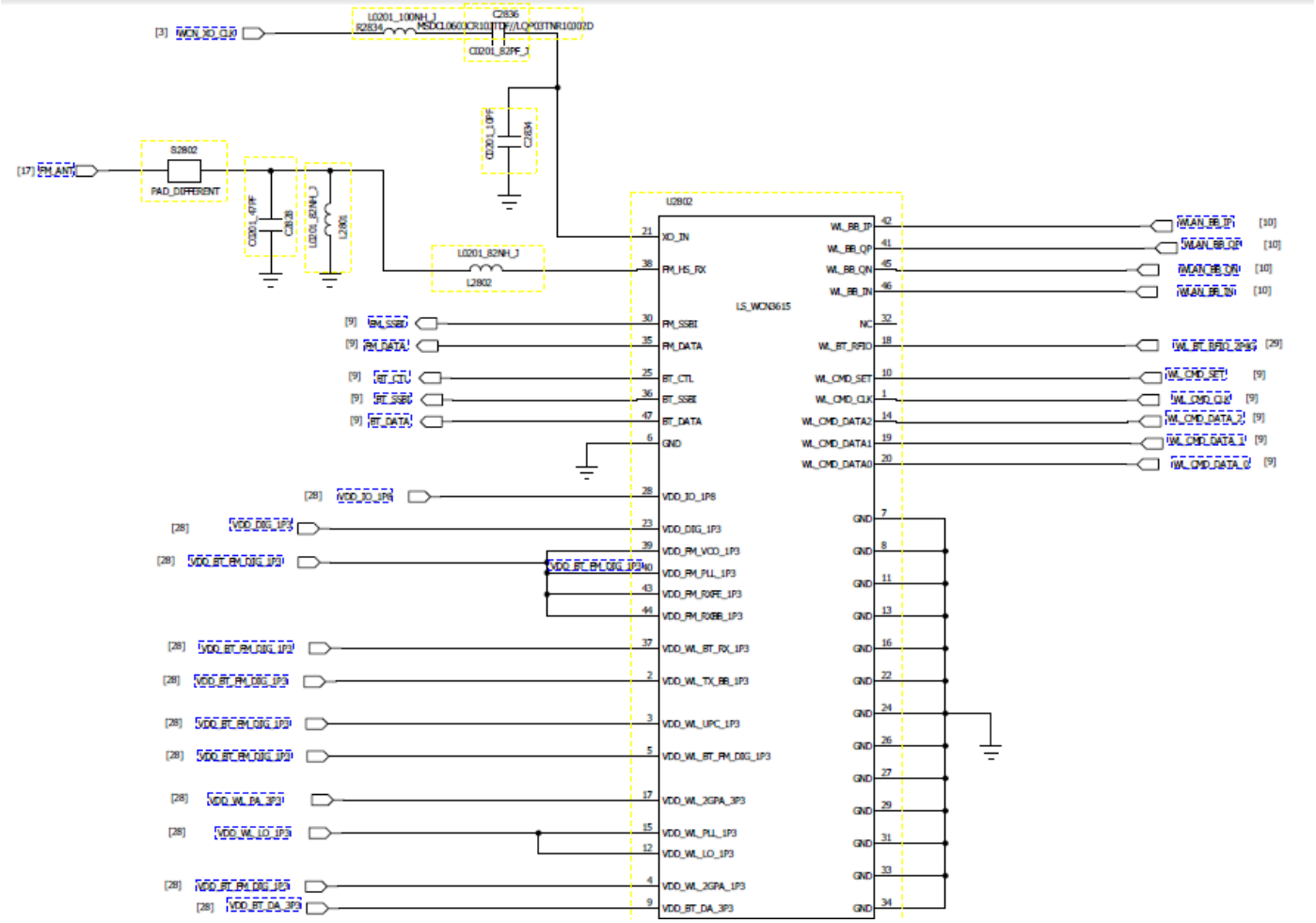

Solution:

1 Check MB's WIFI/BT antenna channel components or their soldering for damage;
2 Check headset channel connection, FM antenna circuit in headset;
3 Check filter FL2904 or DU2901 for soldering offset or body damage;
4 Add-solder or re-solder U2802 WLAN/BT/FM 3-in-1 chip or replace it before testing again;
5 Add-solder or re-solder CPU U1101 or replace it before testing it again;

18. GPS failure

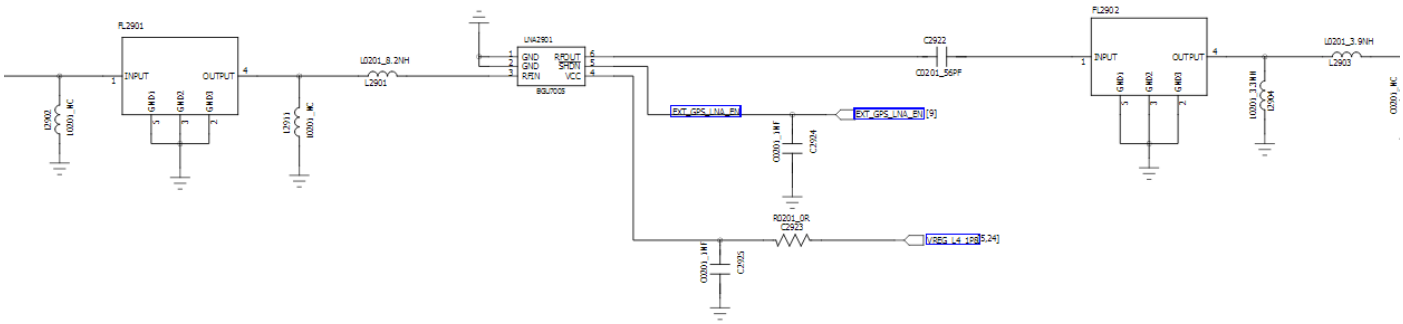

Solution:

1 Check GPS channel components for soldering or body errors;
2 Check filter FL2901 and FL2902 for soldering or body errors;
3 Add-solder or re-solder U2801 chip or replace it before testing again;
4 Add-solder or re-solder CPU U1101 or replace it before testing it again;

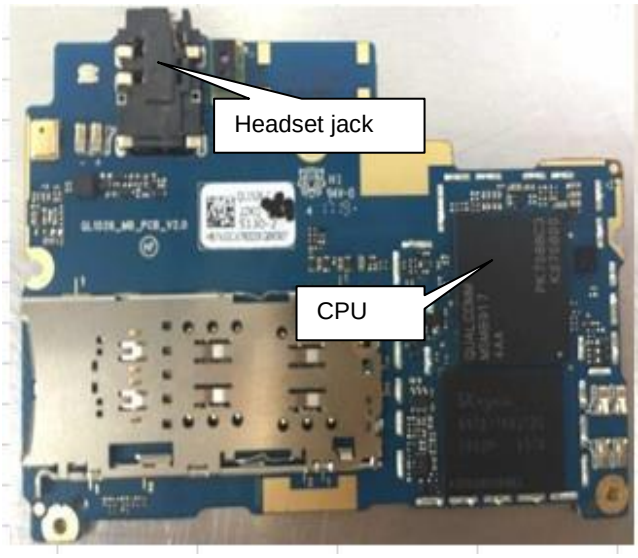

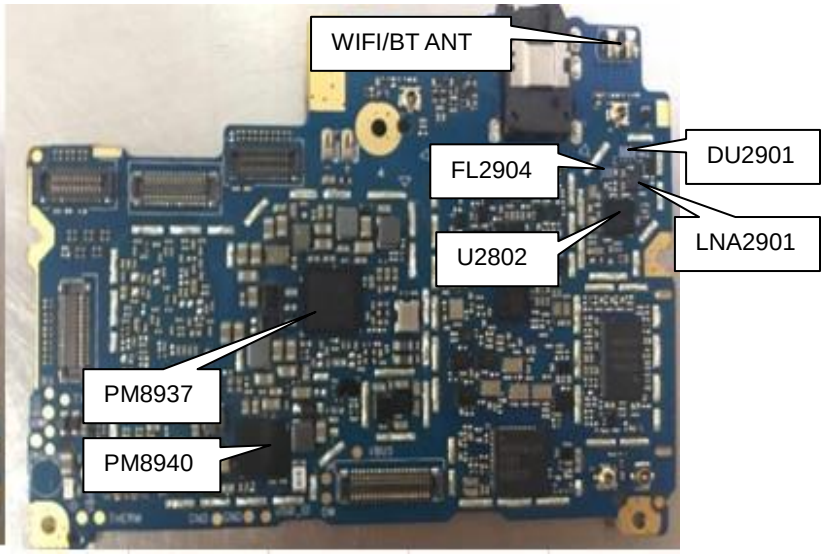

19. Headset identification failure/headset MIC errors

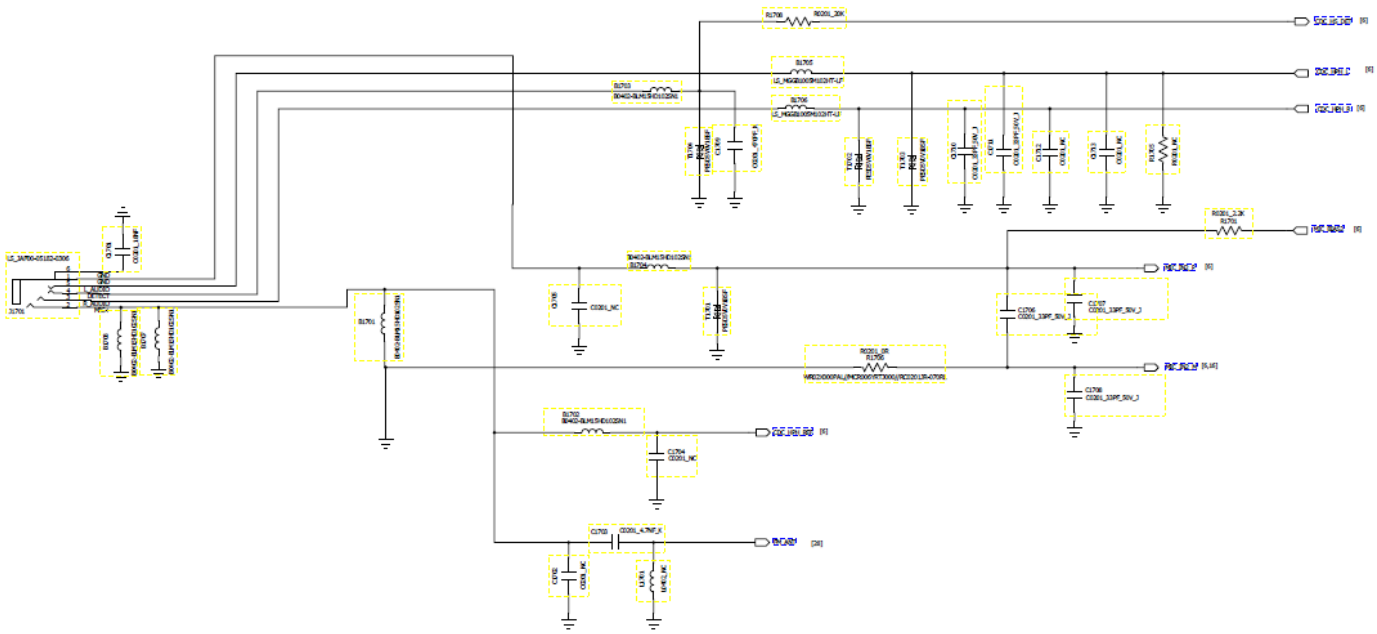

Solution:

1. Re-test headset function after replacing headset;
2. Check headset jack for damage or soldering for skew or over height, re-solder or replace headset jack;
3. Check headset circuit components for damage of its soldering for errors, repair before testing it again;
4. Re-solder or replace CPU U1101

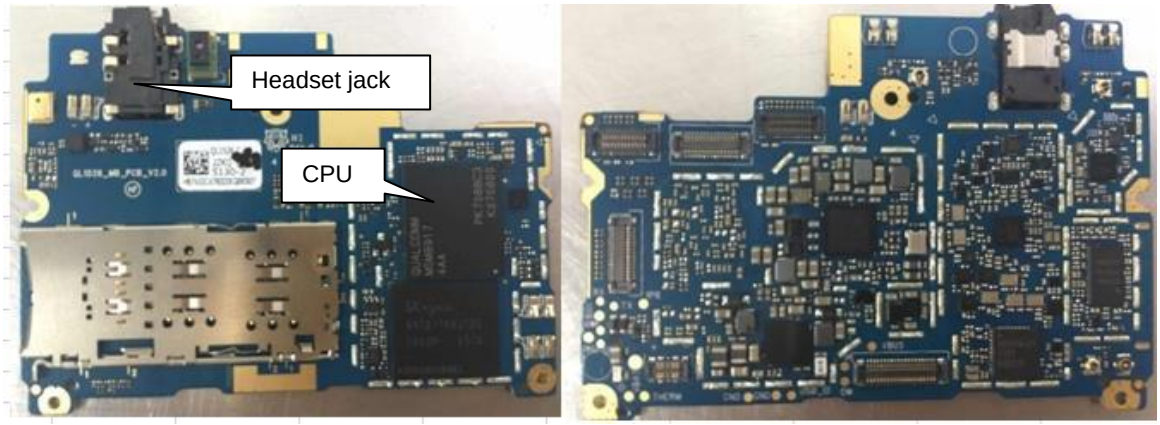

20. MIC silent/low volume

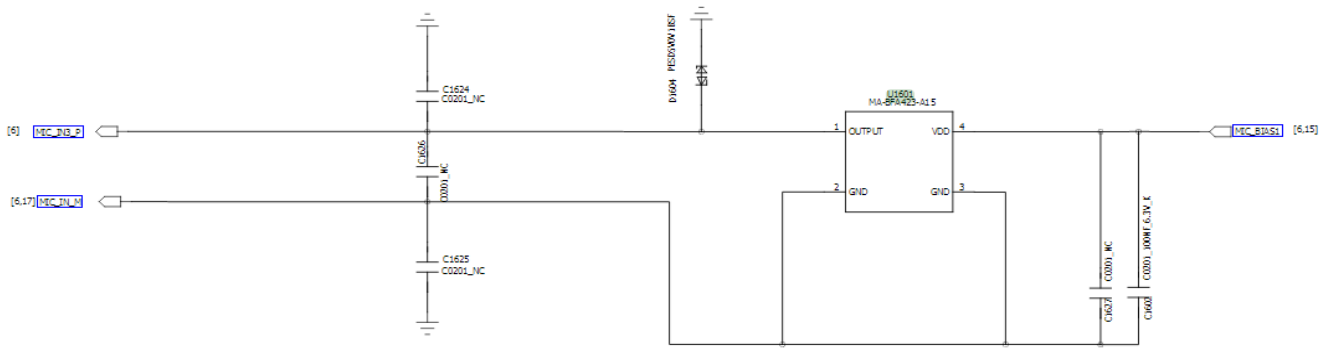

Solution:

1. Main MIC located on KB board, replace KB board or MB positioning error on MB or small MB;
2. Check MB's KB board connector for damage or soldering for skew or continuous tin;
3. Visually check secondary MIC U1601 relevant components for soldering offset or body damage;
4. Replace secondary MIC before testing it again. Pay attention to high temperature during replacement as it may damage it.
5. Add-solder or re-solder U301 PM8937, or replace it before testing again;

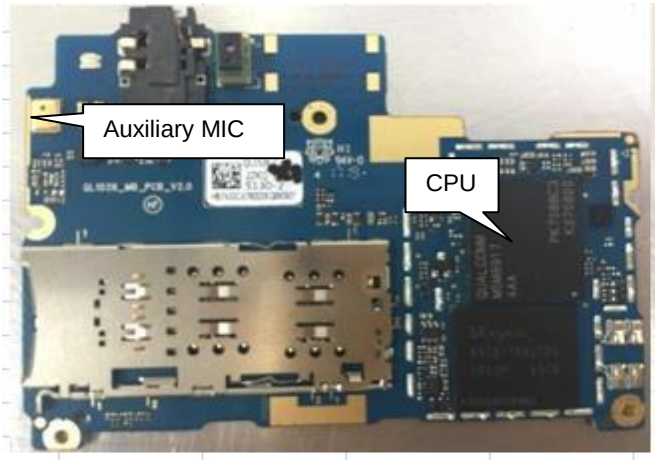

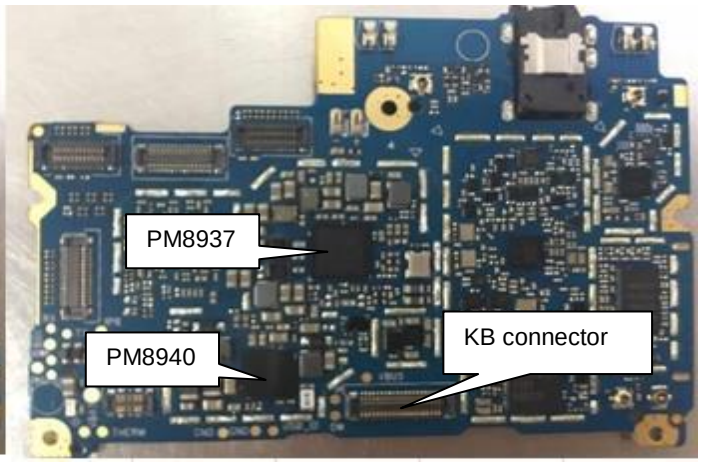

21. Earpiece silent

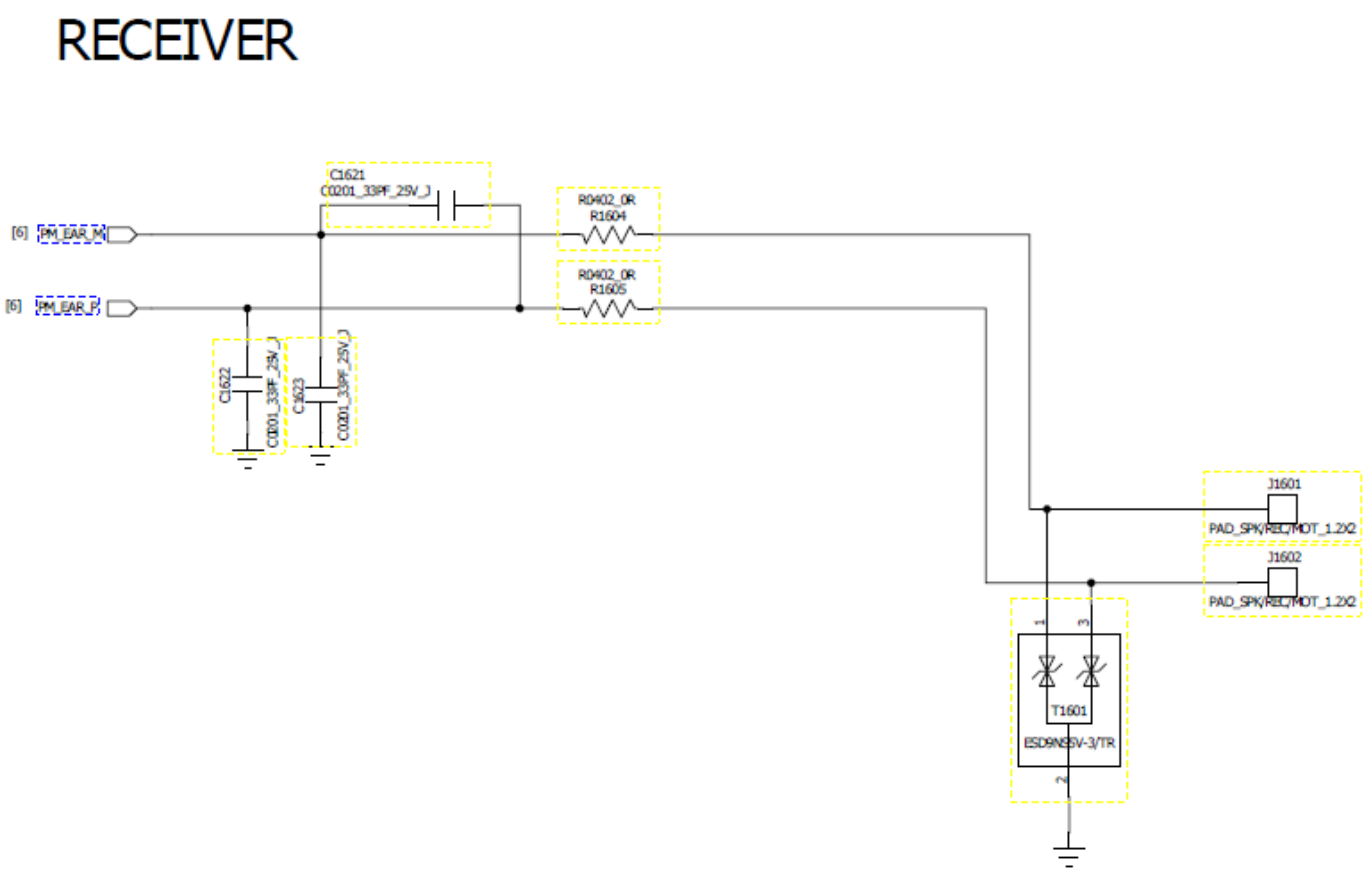

Solution:

1 Re-install or replace earpiece before testing it again;
2 Visually check headset circuit components for soldering offset or body damage;
3 Add-solder or re-solder U301 PM8937 before testing again;

22. Speaker silent

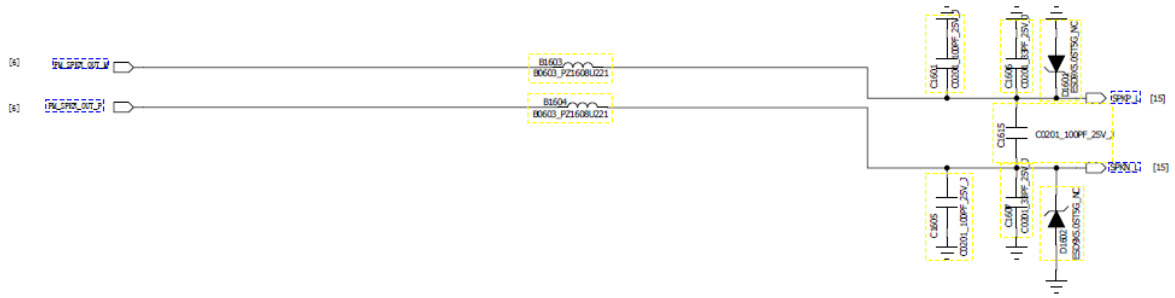

Solution:

1 The speaker is located on KB board. Replace KB board to test and determine whether KB board or the MB is defective and then repair it;
2 Visual check relevant components for damage or soldering error;
3 Check connector between MB and KB board for skew and continuous tine;
4 Add-solder or replace PM8937 U301.
5 Add-solder or replace CPU U1101.

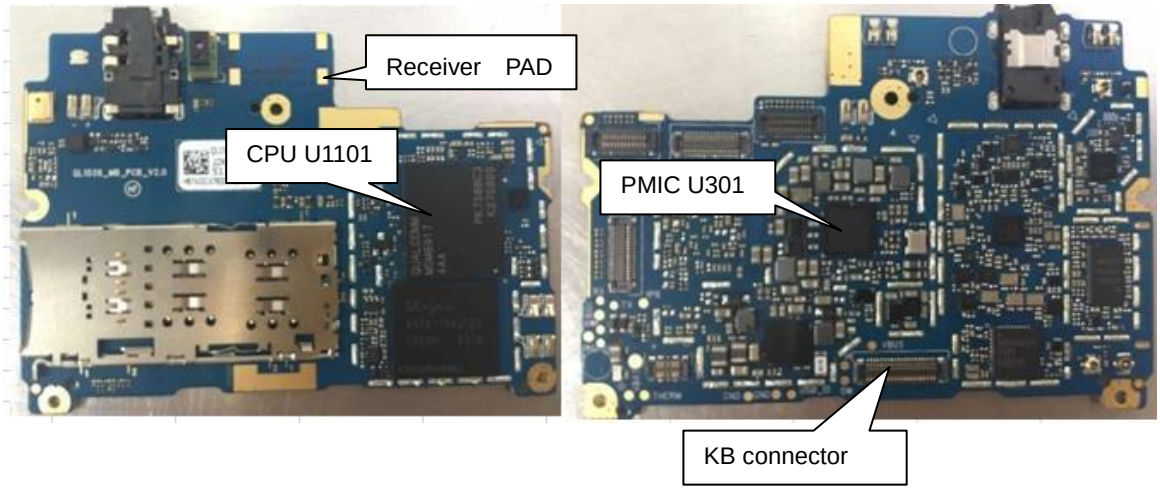

23. SIM card or SD card identification failure

T_FLASH

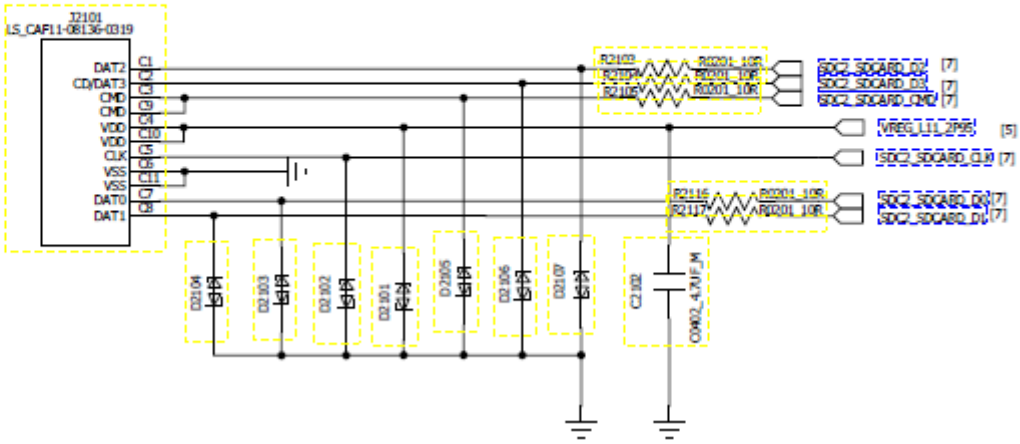

SIM&T_FLASH 3IN3

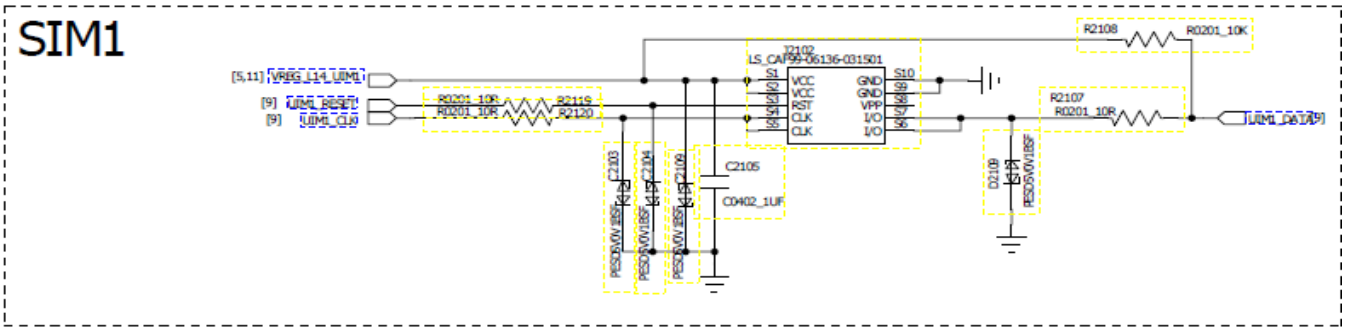

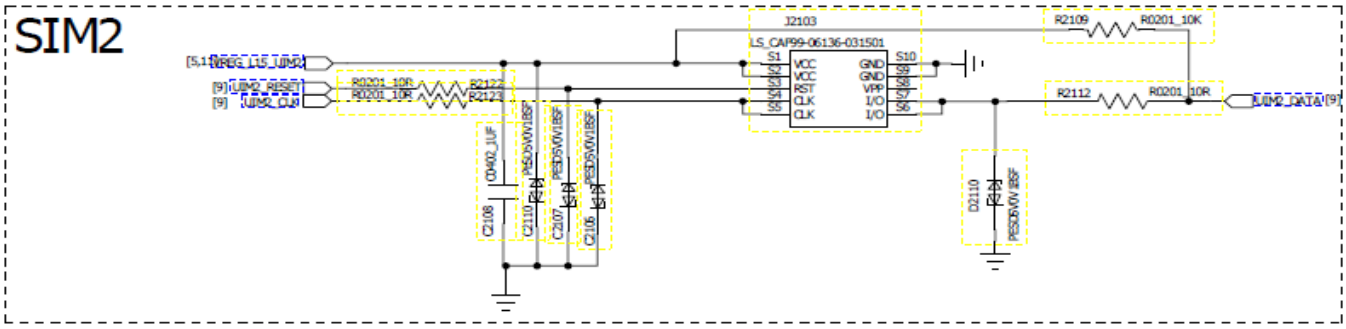

Solution:
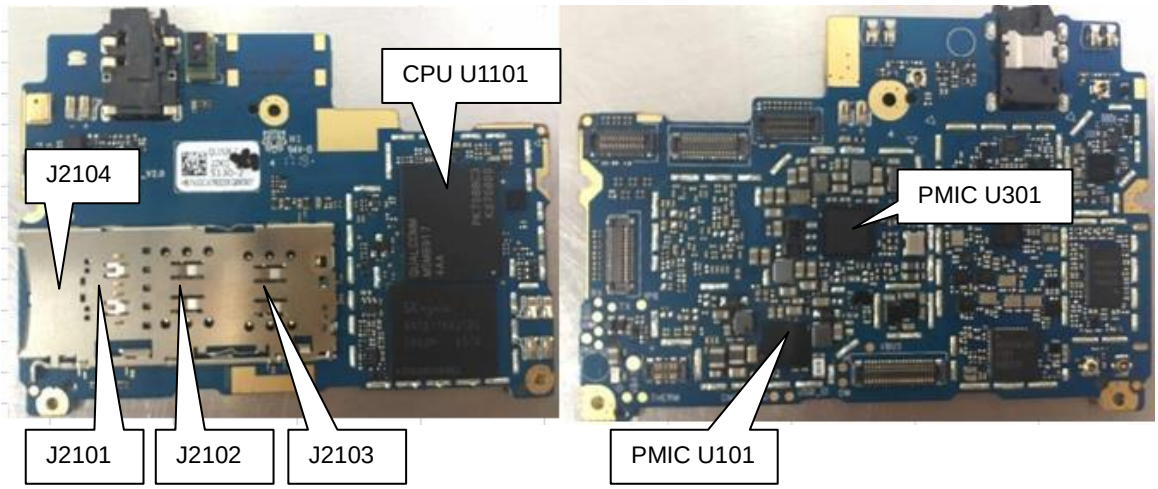
1 SIM&SD card 3-in-1 holder is composed of J2101, J2102, J2103 and J2104;
2 Visually check whether the soldering of J2101, J2102 and J2103 inside the shell J2104 is normal and whether the metal dome is collapsed or dirty;
3 Measure the SD card power supply voltage VREG_L11_2P95;
4 Check SIM card voltage VREG_L15_UIM2 and VREG_L14_UIM1
5 Check whether the related circuit components and its soldering is abnormal
6 Measure whether the impedance of each testing point is normal;
7 Re-solder or replace U301 PM8937;
8 Re-solder or replace U1101 CPU